MONTGOMERY COUNTY
PLANNING COMMISSION

755 ROANOKE STREET, SUITE 2A, CHRISTIANSBURG, VIRGINIA 24073-3177

MEMORANDUM

TO: Bill Brown, Chair
Montgomery Co. Board of Supervisors

FROM: Frank Lau, Chair
Montgomery Co. Planning Commission

DATE: December 11, 2014

SUBJ: **(SU-2014-12472)**

A request by **John A. Barr Jr. and Kelly Burdette** for an amendment to a Special Use Permit (SUP) on approximately 57.139 acres in an Agricultural (A1) zoning district approved May 10, 2010 for a kennel and 2 (two) detached accessory structures over 1200 square ft. to revise condition 3(b) allowing an increase in the permitted area and height of one of the accessory structures. The proposed structure will increase in area from 1,680 square ft. to 3,600 square ft. and from 20 ft. to 24 ft. in height. The property is located at **490 Craig Creek Road** and is identified as Tax Parcel No. 015- A 1 (Account No. 002518) in the Mount Tabor Magisterial District (District A). The property currently lies in an area designated as Resource Stewardship in the 2025 Comprehensive Plan.

During our meeting on December 10, 2014, the Planning Commission reviewed the request described above. Upon a motion duly seconded and carried by a vote of 8 to 0 (Hirt absent), the Planning Commission recommended **approval** of amending the existing special use permit.

After reviewing the application details, concept plan, and current photos of the site, the Commission expressed no major concerns with increasing the square footage of a proposed accessory dwelling from 1,680 sq. feet to 3,600 sq. feet.

The Commission felt that the application meets the requirements of the Comprehensive Plan and recommended approval of the SUP with the following revised conditions:

1. Kennel operations shall be limited to the breeding, raising, and selling of dogs and/or puppies owned by the property owner.
2. A yearly kennel license for no more than 50 dogs shall be obtained as required by Montgomery County Code.

3. The proposed accessory structures as shown on ~~"Sketch Showing Proposed House & Kennel" prepared by Berkman Land Surveying, dated February 24, 2010 (Job No. 09093)~~ Plat Showing Existing House & Proposed Kennel & Garage" prepared by Berkman Land Surveying, dated October 10, 2011 (Job No. 09093) shall be limited in size as follows:
   - Building 1 shall not exceed 3,600 square feet in area and 27 ft. in overall height.
   - Building 2 shall not exceed ~~1,680~~ 3,600 square feet in area and ~~20~~ 27 ft. in overall height.
4. Accessory structures shall be used for personal and kennel use only. Retail sales and/or other commercial activities shall not be permitted.
5. The accessory structures shall not be used as a dwelling, accessory or otherwise without obtaining the proper permits and approvals from the Zoning Administrator, Health Department, and Building Official.

All adjoining property owners were notified in compliance with the Code of Virginia and Section 10-52(3) of the Montgomery County Code. Staff has not received any inquiries regarding the proposed amendment to the Special Use Permit (SUP) and there were no public comments during the hearing.

Fl/bh

Attachments: Staff analysis and application materials

DRAFT

R-FY-15-
RESOLUTION AMENDING A SPECIAL USE PERMIT APPROVED MAY 10, 2010 (R-FY-10-168) ALLOWING FOR A KENNEL OPERATION AND 2 (TWO) DETACHED ACCESSORY STRUCTURES OVER 1200 SQUARE FT. 24 FT. IN HEIGHT TO REVISE CONDITION 3(B) BY ALLOWING AN INCREASE IN THE PERMITTED AREA AND HEIGHT OF ONE OF THE ACCESSORY STRUCTURES - 490 CRAIG CREEK ROAD
PARCEL ID 002518, TAX MAP NUMBER 015-A-1
JOHN A. BARR JR. AND KELLY BURDETTE

BE IT RESOLVED, By the Board of Supervisors of Montgomery County, Virginia that the request by **John A. Barr Jr. and Kelly Burdette** to amend a Special Use Permit (SUP) on approximately 57.139 acres in an Agricultural (A1) zoning district approved May 10, 2010 allowing for a kennel operation and two detached accessory structures over 1200 square ft. by revising condition 3(b) allowing for an increase in the permitted area and height of one of the accessory structures is hereby found to be consistent with the County's Comprehensive Plan and is approved subject to the following conditions:

1. Kennel operations shall be limited to the breeding, raising, and selling of dogs and/or puppies owned by the property owner.
2. A yearly kennel license for no more than 50 dogs shall be obtained as required by Montgomery County Code.
3. The proposed accessory structures as shown on plat entitled "Plat Showing Existing House & Proposed Kennel & Garage" prepared by Berkman Land Surveying, dated October 10, 2011 (Job No. 09093) shall be no larger than as follows:
   - Building 1 shall not exceed 3,600 square feet in area and 27 ft. in overall height.
   - Building 2 shall not exceed 3,600 square feet in area and 27 ft. in overall height.
4. Accessory structures shall be used for personal and kennel use only. Retail sales and/or other commercial activities other than the kennel operation shall not be permitted.
5. The accessory structures shall not be used as a dwelling, accessory or otherwise without obtaining the proper permits and approvals from the Zoning Administrator, Health Department, and Building Official.

The property is located at 490 Craig Creek Road and is identified as Tax Parcel No. 015- A 1 (Account No. 002518) in the Mount Tabor Magisterial District (District A). The property currently lies in an area designated as Resource Stewardship in the 2025 Comprehensive Plan.

JUSTIFICATION: At a Regular Meeting on December 10, 2014 the Planning Commission, on a vote of 8-0, recommended **approval** of the Special Use Permit request to the Board of Supervisors.

MONTGOMERY COUNTY DEPARTMENT OF PLANNING & GIS SERVICES

PLANNING
GIS & MAPPING

755 ROANOKE STREET, SUITE 2A, CHRISTIANSBURG, VIRGINIA 24073-3177

MEMORANDUM

TO: Planning Commission

FROM: Planning Staff

DATE: December 2, 2014

RE: **Staff Analysis (SU-2014-12472)**

A request by **John A. Barr Jr. and Kelly Burdette** for an amendment to a Special Use Permit (SUP) on approximately 57.139 acres in an Agricultural (A1) zoning district approved May 10, 2010 for a kennel and 2 (two) detached accessory structures over 1200 square ft. to revise condition 3(b) allowing an increase in the permitted area and height of one of the accessory structures. The proposed structure will increase in area from 1,680 square ft. to 3,600 square ft. and from 20 ft. to 24 ft. in height. The property is located at **490 Craig Creek Road** and is identified as Tax Parcel No. 015- A 1 (Account No. 002518) in the Mount Tabor Magisterial District (District A). The property currently lies in an area designated as Resource Stewardship in the 2025 Comprehensive Plan.

I. Nature of Request

The applicants, John Barr & Kelly Burdette, are requesting an amendment to an existing Special Use Permit to revise condition #3(b) and allow an accessory building approximately 3,600 square feet in area and 24 ft. in height.

The original Special Use Permit was approved on May 10, 2010 to allow a kennel and the construction two (2) accessory structures greater than 1,200 sq. ft. in area and 18 ft. in height.

II. Analysis

In 2010, the applicants desired to construct two (2) accessory structures on their property. Both accessory structures were proposed to be utilized partially for kennel operations and were limited to the following conditions regarding size:

- Building 1 shall not exceed 3,600 square feet in area and 27 ft. in overall height.
- Building 2 shall not exceed 1,680 square ft. in area and 20 ft. in overall height.

Due to financial constraints one (1) 42x70 accessory structure (2,940 sq. ft.) was constructed for kennel operations. Based on the SUP conditions this building would be considered Building 1. The owners are

currently ready to construct the second accessory structure and are requesting the special use permit be amended to allow additional square footage. The proposed building is 48x72 (3,456 sq. ft.) and will be constructed by Morton Buildings. The building plans show a barn style construction with cupolas and will be utilized as a three (3) car garage with storage for equipment/materials necessary to maintain the existing property. It is proposed that the garage will be constructed to be complimentary to existing dwelling with stone wainscoting and gray metal roofing.

All adjoining property owners were notified in compliance with the Code of Virginia and Section 10-52(3) of the Montgomery County Code. Adjacent property owners and/or other interested parties may also be present at the public hearing to present their views on this request.

III. Staff Recommendation

Staff preliminarily recommends approval of the request submitted by John Barr & Kelly Burdette to allow an amendment to a Special Use Permit previously approved on May 10, 2010 (R-FY-10-168) to revise the square footage allowed in condition #3:

1. Kennel operations shall be limited to the breeding, raising, and selling of dogs and/or puppies owned by the property owner.
2. A yearly kennel license for no more than 50 dogs shall be obtained as required by Montgomery County Code.
3. The proposed accessory structures as shown on ~~"Sketch Showing Proposed House & Kennel" prepared by Berkman Land Surveying, dated February 24, 2010 (Job No. 09093)~~ Plat Showing Existing House & Proposed Kennel & Garage" prepared by Berkman Land Surveying, dated October 10, 2011 (Job No. 09093) shall be limited in size as follows:
   - Building 1 shall not exceed 3,600 square feet in area and 27 ft. in overall height.
   - Building 2 shall not exceed ~~1,680~~ 3,600 square feet in area and ~~20~~ 27 ft. in overall height.
4. Accessory structures shall be used for personal and kennel use only. Retail sales and/or other commercial activities shall not be permitted.
5. The accessory structures shall not be used as a dwelling, accessory or otherwise without obtaining the proper permits and approvals from the Zoning Administrator, Health Department, and Building Official.

Enclosures: Maps
Application materials
SUP Ordinance (R-FY-10-168)

John A Barr Jr
Request
For
Special Use Permit

(Accessory Structure)

Parcel ID(s): 002518

Legend

Tax Parcels

Subject Property (John Barr Parcel)

Cemeteries

Parcel Date: September 2014
Source Montgomery County Commissioner of Revenue

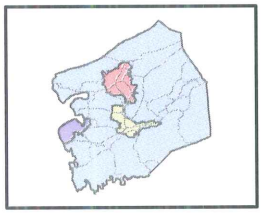

Montgomery County, Virginia
DISCLAIMER

INFORMATION SHOWN ARE TO BE USED FOR REFERENCE PURPOSES ONLY. THE MONTGOMERY COUNTY BOARD OF SUPERVISORS NOR PLANNING AND GIS SERVICES ARE NOT RESPONSIBLE FOR ANY INACCURACIES HEREIN. NO RESPONSIBILITY IS ASSUMED FOR DAMAGES OR OTHER LIABILITIES.

THE INFORMATION SHOWN HEREON IS TO BE USED FOR REFERENCE PURPOSES ONLY AND IS NOT TO BE CONSTRUED OR USED AS A LEGAL OR OFFICIAL DETERMINATION OF OFFICIAL COUNTY, STATE, AND FEDERAL RECORDS. DATA IS BELIEVED TO BE ACCURATE, BUT IS NOT GUARANTEED.

IN NO EVENT SHALL MONTGOMERY CO. BE LIABLE FOR ANY DAMAGES THAT MIGHT ARISE FROM THE USE OR ANY INFORMATION SHOWN.

EXACT LOCATION OF ANY FLOOD ZONE TO BE CERTIFIED BY LICENSED LAND SURVEYOR, ENGINEER, OR ARCHITECT.

CONTOURS SHOWN ARE FOR VISUAL REFERENCE, TO AVOID THE RISK OF MISINTERPRETATION, INVALID RESULTS, AND ERRONEOUS CONCLUSIONS. ORIGINAL LIDAR GENERATED CONTOUR DATA SHOULD BE USED FOR LAND DEVELOPMENT, SURVEY AND ENGINEERING PURPOSES.

"Any determination of topography or contours, or any depiction of physical improvements, property lines or boundaries is for general information only and shall not be used for the design, modification, or construction of improvements to real property or for flood plain determination."
C of § 54.1-402

0 50 100 200 300 400
Feet

Prepared by Montgomery County, Va
Planning & GIS Services, 011/04/2014

N
W E
S

John A Barr Jr Request For Special Use Permit

(Accessory Structure)

Parcel ID(s): 002518

Legend

Tax Parcels

Subject Property (John Barr Parcel)

Cemeteries

Zoning Class

A1 - Agriculture

FL - Federal Lands (C1 Conservation)

Parcel Date: September 2014
Source Montgomery County Commissioner of Revenue

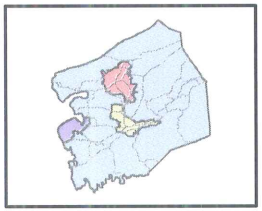

Montgomery County, Virginia
DISCLAIMER

INFORMATION SHOWN ARE TO BE USED FOR REFERENCE PURPOSES ONLY. THE MONTGOMERY COUNTY BOARD OF SUPERVISORS NOR PLANNING AND GIS SERVICES ARE NOT RESPONSIBLE FOR ANY INACCURACIES HEREIN, NO RESPONSIBILITY IS ASSUMED FOR DAMAGES OR OTHER LIABILITIES.

THE INFORMATION SHOWN HEREON IS TO BE USED FOR REFERENCE PURPOSES ONLY AND IS NOT TO BE CONSTRUED OR USED AS A LEGAL OR OFFICIAL DETERMINATION OF OFFICIAL COUNTY, STATE, AND FEDERAL RECORDS. DATA IS BELIEVED TO BE ACCURATE, BUT IS NOT GUARANTEED.

IN NO EVENT SHALL MONTGOMERY CO. BE LIABLE FOR ANY DAMAGES THAT MIGHT ARISE FROM THE USE OR ANY INFORMATION SHOWN.

EXACT LOCATION OF ANY FLOOD ZONE TO BE CERTIFIED BY LICENSED LAND SURVEYOR, ENGINEER, OR ARCHITECT.

CONTOURS SHOWN ARE FOR VISUAL REFERENCE. TO AVOID THE RISK OF MISINTERPRETATION, INVALID RESULTS, AND ERRONEOUS CONCLUSIONS, ORIGINAL LIDAR GENERATED CONTOUR DATA SHOULD BE USED FOR LAND DEVELOPMENT, SURVEY AND ENGINEERING PURPOSES.

"Any determination of topography or contours, or any depiction of physical improvements, property lines or boundaries is for general information only and shall not be used for the design, modification, or construction of improvements to real property or for flood plain determination."
C of § 54.1-402

0 87.5 175 350 525 700
Feet

Prepared by Montgomery County, Va
Planning & GIS Services, 011/04/2014

Application to Planning Commission and Board of Supervisors

Application For: (check appropriate boxes)

☐ Rezoning ☐ Rezoning & Special Use Permit ☐ Special Use Permit

Owner/Applicant Information: (Use current mailing/contact information for all property owners. An additional sheet may be attached for multiple owners.)

Property Owner: John A. Barr Jr. Kelly Burdette
Address: 490 Craig Creek Rd. Blacksburg VA 24060
Phone 1: 540-552-4160 (H)
Phone 2: 240-674-0604 (c)
Email: JohnBarr6@aol.com

Agent:
Address:
Phone 1:
Phone 2:
Email:

Location of Property/ Site Address: As above

Legal Record of Property: Total Area: 57.139 **Acres** **Magisterial District** Mount Tabor

Parcel ID: 002518 **Tax Parcel Number(s):** 015(A)1

Rezoning Details: Current Zoning District: _____ **Requested Zoning District:** _____

Desired Use(s):

Special Use Permit: Current Zoning District A1 **Total Area/Acres:** 57.139

Desired Use(s): Accessory structure greater than 1200 sq. ft.

Comprehensive Plan Designation: Resource Stewardship

Traffic Impact Analysis Required: ☐ Yes (payment enclosed) ☒ No

I certify that the information supplied on this application and on the attachments provided (maps or other information) is accurate and true to the best of my knowledge. In addition, I hereby grant permission to the agents and employees of Montgomery County and State of Virginia to enter the above property for the purposes of processing and reviewing the above application.

Kelly Burdette 10/3/14

Property Owner(s) Signature **Date**

Agent's Signature **Date**

FOR OFFICE USE ONLY

Date Received: _____ **Application Number:** _____

Traffic Impact Analysis and Payment Received: ☐ Yes ☐ No **Date Submitted to VDOT:** _____

Request for Special Use Permit

Accessory Structure greater than 1200 sq. ft.

Introduction:

This special use permit is requested by John Barr and Dr Kelly Burdette. My wife and I both moved from Maryland where we attended high school together. She has lived in Montgomery County since 1988 and I moved here later. Dr Burdette is a graduate of Virgina Tech and opened Town and Country Veterinary Clinic in Christiansburg in 1992. Town and Country has grown well over the years and is a veterinary clinic that is fully staffed 24 hours and offers a complete line of services including providing emergency care to the New River Vally and surrounding areas. Town and Country employs approximately 65 people including 10 doctors. Along with the clinic we also raise dogs at our home. We raise Cockapoos and Goldendoodles and have done so for over 25 years. We also have 5 daughters that attend Blacksburg schools.

This special use permit was previously approved on May 10, 2010. At the time we filed a permit for 2 accessory structures and a private kennel. Since that time we have constructed a new home and the new kennel building. The second structure, a garage/barn storage building, was delayed due to financial constraints of undertaking all the construction at one time. We are now resubmitting our special use permit for the second building.

Concept Development Plan:

Requested by John Barr and Kelly Burdette for 490 Craig Creek Rd, Blacksburg consisting of 57.139 acres identified as parcel 002518, tax map 15(A). This property is zoned A1 and is listed as a Resource Stewardship area. The property consists of 1630 ft. of road frontage on Craig Creek and the other 3 sides of the property are bordered by the Jefferson National Forest. Our goal is to create a beautiful farm type residence. Our home and kennel are centrally located in the property. We would like to continue with our original plan and construct a second accessory structure for a garage/barn/storage building. All site preparation was done at the time of the other construction in May of 2011. The building would be located in the exact same location as was originally planned. The structure was originally planned as a 42'x60'x14' main building with an attached 36'x30'x9' open wing. The building now would be 48'x72'x14'. The front @ 30' of the building would be a large 3 car garage with 3 individual garage doors. The rear of the building would be for storage of equipment and materials required for the dogs and maintenance of the 57 acres. The rear would have one large door @ 10'x13'. The building will be constructed by Morton Buildings of Roanoke Va., the same company that constructed our current Kennel building. The building will be a pole barn type construction and will have a black metal roof with 2 cupolas. Morton Buildings will build the building with the poles, metal roof, cupolas, all soffit and eave trim, gutters and downspouts. I will then conventionally frame between the existing poles and cover the exterior of the building in 10" lap siding to match our house. A stone waiscotting will be on at least the front fascia of the garage to match the house and kennel. Our intention is to match this building more to our house than the kennel which has a gray roof and ivory metal sides. The building will be built with a gravel floor with intentions for a concrete floor in the future and when financially possible.

Comprehensive Plan Justification:

Our property is listed as Resource Stewardship and our plans for this property are in line with this use. Having animals on the property and creating a farm type residence are both good matches for Resource Stewardship.

Additional Special Use Permit Requirements:

1. Whether the proposed Special Use Permit is consistent with the Comprehensive Plan (Addressed under "3. Comprehensive Plan Justification"). **Yes, it is consistent**

2. Whether the proposed Special Use Permit will adequately provide for safety from fire hazards and have effective measures of fire control. **The building is for storage so there are no fire safety measures to be taken.**

3. The level and impact of any noise emanating from the site, including that generated by the proposed use, in relation to the uses in the immediate area. **No noise will be generated since the main purpose of the building is storage.**

4. The glare or light that may be generated by the proposed use in relation to uses in the immediate area. **The building will not produce any light or glare at this time since no electricity will be installed.**

5. The proposed location, lighting and type of signs in relation to the proposed use, uses in the area, and the sign requirements of this Ordinance. **There will not be any signs of any type for this building.**

6. The compatibility of the proposed use with other existing or proposed uses in the neighborhood, and adjacent parcels. **There are no adjacent parcels other than the National Forest and other residences on Craigs Creek Rd are capatible with this use and are farm type with barns,garages and storage buildings.**

7. The location and area footprint with dimensions (all drawn to scale), nature and height of existing or proposed buildings, structures, walls, and fences on the site and in the neighborhood. **Proposed building is 48'x72'x14' @ 24' to roof peak. Existing house is 40'x84'x@34' tall and @5400 sq. ft.. Kennel is 42'x70'x10' @ 21' to peak. There are walls/fence around the pool behind the home. The garage will be @ 155' from the home and @ 210' from the kennel. The kennel is @ 145' from the home. Please see the survey and scetch for the layout of the entire home/farm.**

8. The nature and extent of existing or proposed landscaping, screening and buffering on the site and in the neighborhood. **Most of the entire 57 acres is wooded and we intend to leave the property as wooded as possible. The site where the building will go was cleared and leveled 2 1/2 years ago when the home and kennel were constructed and there is no additional landscaping that will be around the garage at this time.**

9. The timing and phasing of the proposed development and the duration of the proposed use. **Construction would start upon approval and would hopefully be completed in**

approximately 4 months. We intend to occupy the property for at least 20-30 yrs.

10. Whether the proposed Special Use Permit will result in the preservation or destruction, loss or damage of any topographic or physical, natural, scenic, archaeological or historic feature of significant importance. As stated earlier the site is already cleared and leveled and there will be no damage to anything of any kind.

11. Whether the proposed Special Use Permit at the specified location will contribute to or promote the welfare or convenience of the public. This permit is for a garage/barn for personal storage and will not have any impact on the general public.

12. The traffic expected to be generated by the proposed use, the adequacy of access roads and the vehicular and pedestrian circulation elements (on and off-site) of the proposed use, all in relation to the public's interest in pedestrian and vehicular safety and efficient traffic movement. There will be no traffic associated with this building or its use. The driveway to the home, kennel and this building are all in place and adequate. Since this is all centrally located on 57 private acres there will be no relation to any public pedestrian or vehicular traffic or safety concerns.

13. Whether, in the case of existing structures proposed to be converted to uses requiring a Special Use Permit, the structures meet all code requirements of Montgomery County. This is brand new construction and there are no existing structures being converted.

14. Whether the proposed Special Use Permit will be served adequately by essential public facilities and services. There will be no facilities to this building at this time. Electricity will hopefully be installed sometime in the future.

15. The effect of the proposed Special Use Permit on groundwater supply. There will be no effect on groundwater by this building.

16. The effect of the proposed Special Use Permit on the structural capacity of the soils. None

17. Whether the proposed use will facilitate orderly and safe road development and transportation. Since this building will be located on 57 private acres there will be no effectto any road development or transportation.

18. The effect of the proposed Special Use Permit on environmentally sensitive land or natural features, wildlife habitat and vegetation, water quality and air quality. There are no particular features on the site for the building or its vicinity and as stated the site was prepared 2 1/2 years ago and is just an open level area surrounded by trees.

19. Whether the proposed Special Use Permit use will provide desirable employment and enlarge the tax base by encouraging economic development activities consistent with the Comprehensive Plan. This buiding will be for personal storage and will have no business or employees or impact economic development in any way.

20. Whether the proposed Special Use Permit considers the needs of agriculture, industry, and businesses in future growth. **Since the building is just for storage there are no considerations for any future growth of any kind.**

21. The effect of the proposed Special Use Permit use in enhancing affordable shelter opportunities for residents of the County. **There would be no effect on any shelter for any residents.**

22. The location, character, and size of any outdoor storage. **There is no outdoor storage planned and everything will be stored in the building.**

23. The proposed use of open space. **There is no plan for any open space.**

24. The location of any major floodplain and steep slopes. **There are not any known floodplains in the area and the existings slopes or hills around the site would not be considered steep. The mountain to the rear of the property is the closest steep slope and is approximately 1800-2000' behind the proposed site.**

25. The location and use of any existing non-conforming uses and structures. **There are no known non-conforming uses or structures.**

26. The location and type of any fuel and fuel storage. **There is no fuel or fuel storage on the property.**

27. The location and use of any anticipated accessory uses and structures. **There are no other anticipated uses or structures planned at this time.**

28. The area of each use; if appropriate. **There are no planned uses.**

29. The proposed days/hours of operation. **There are no uses and no operations.**

30. The location and screening of parking and loading spaces and/or areas. **There will be no parking spaces or loading areas.**

31. The location and nature of any proposed security features and provisions. **There are no planned or proposed security features.**

32. The number of employees. **There will be no employees.**

33. The location of any existing and/or proposed adequate on and off-site infrastructure. **There will be no infrastructure.**

34. Any anticipated odors, which may be generated by the uses on site. **The building will be for storage and nothing stored in the building will emitt any odors.**

35. Whether the proposed Special Use Permit uses have sufficient measures to mitigate the impact of construction traffic on existing neighborhoods and school areas. **The construction traffic**

will be minimal and will not have any impact on any neighborhood or school.

HOUSE AND KENNEL

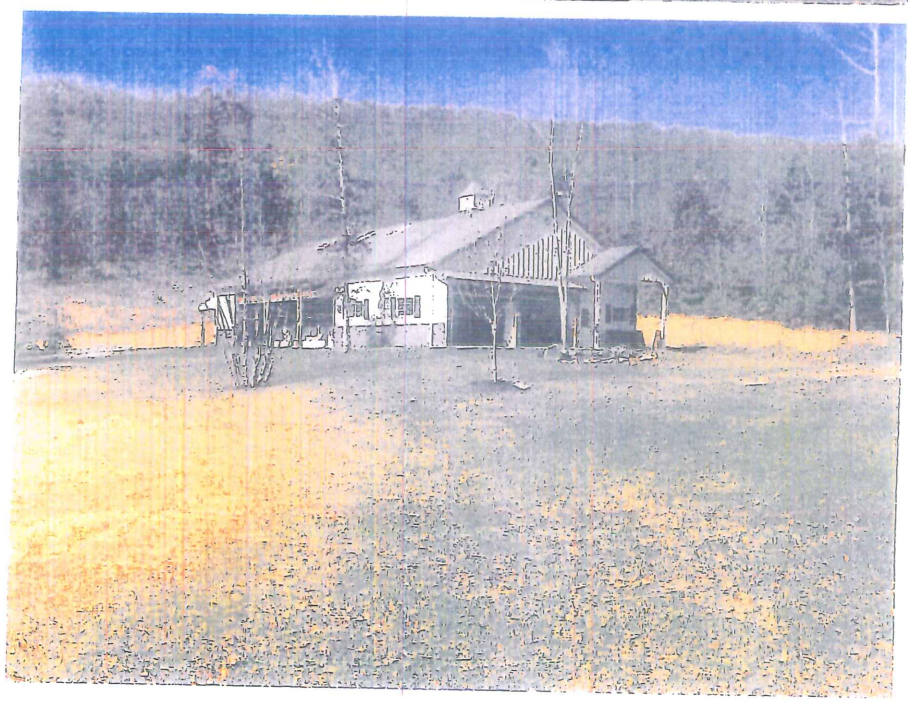

KENNEL

GARAGE SITE

HOUSE

REFERENCES: Montgomery County Tax Map 15 (A) 1; Parcel I.D. #002518; title: John A. Barr & Kelly L. Burdette – Instr. #2009009897.

NOTES:

1. The boundary lines shown hereon are the result of an actual field survey performed Sept. 2009 recorded in Instrument #2009009897.
2. According to FEMA F.I.R.M. Panel No. 51121C0040C, the subject property lies within Zone X, areas outside of any special flood hazard area.
3. Property address: 490 Craig Creek Rd., Blacksburg, VA 24060
4. Subject property is zoned A–1.

LEGEND

- IRON ROD FND. UNLESS NOTED
- IRON ROD SET SEPT. 2009
- FOREST SERVICE STONE FOUND
- ELECTRIC TOWER
- OVERHEAD WIRES
- CREEK OR HOLLOW
- TRACT LINE
- GRAVEL OR SOIL ROAD
- EASEMENT LINE
- PROPOSED FENCE

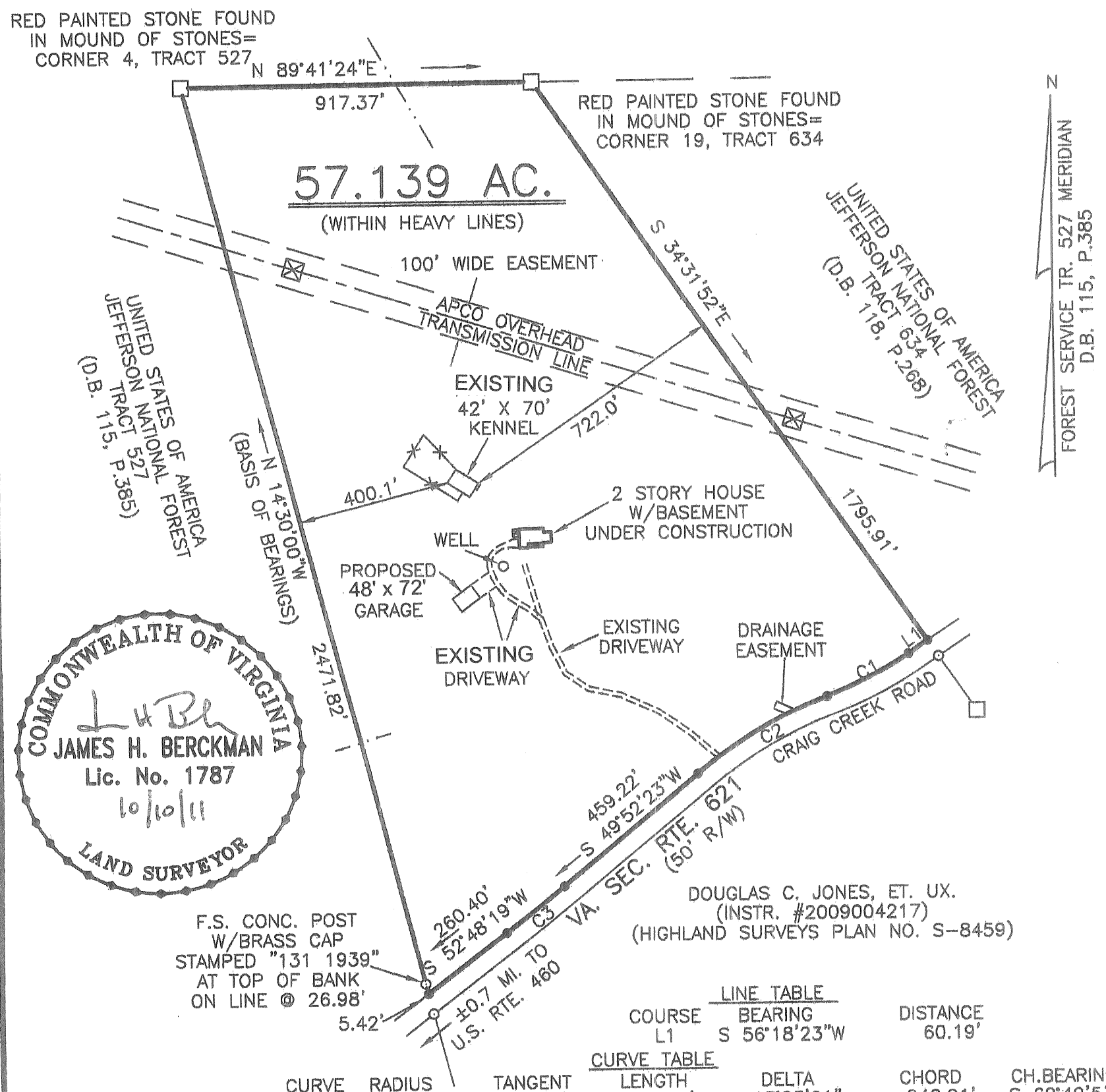

LINE TABLE

COURSE	BEARING	DISTANCE
L1	S 56°18'23"W	60.19'

CURVE TABLE

CURVE	RADIUS	TANGENT	LENGTH	DELTA	CHORD	CH.BEARING
C1	1060.00'	121.24'	241.44'	13°03'01"	240.91'	S 62°49'53"W
C2	1170.92'	201.02'	398.17'	19°29'00"	396.25'	S 59°36'53"W
C3	3794.72'	97.16'	194.28'	2°56'00"	194.25'	S 51°20'23"W

0' 100' 200' 400'

GRAPHIC SCALE

PLAT SHOWING
EXISTING HOUSE &
PROPOSED KENNEL & GARAGE
PREPARED FOR

JOHN A. BARR & KELLY L. BURDETTE

CRAIG CREEK AREA
MOUNT TABOR MAGISTERIAL DISTRICT
MONTGOMERY COUNTY, VIRGINIA

BERCKMAN LAND SURVEYING, INC.
390 A BLUEGRASS TRAIL
NEWPORT, VIRGINIA 24128
(540) 544–7904

DATE: 10 OCT. 2011 SCALE: 1"=400'

JOB NO. 09093

09093C.DWG
09093.CRD

GILES COUNTY
Jefferson National Forest Land
Proposed Site
Nearest Existing Structure
Shooting Range
740
728
655
639
605
593
553
4162
4140
4006
4750
3630
1100
3631
1090
3611
3581
0
539ft

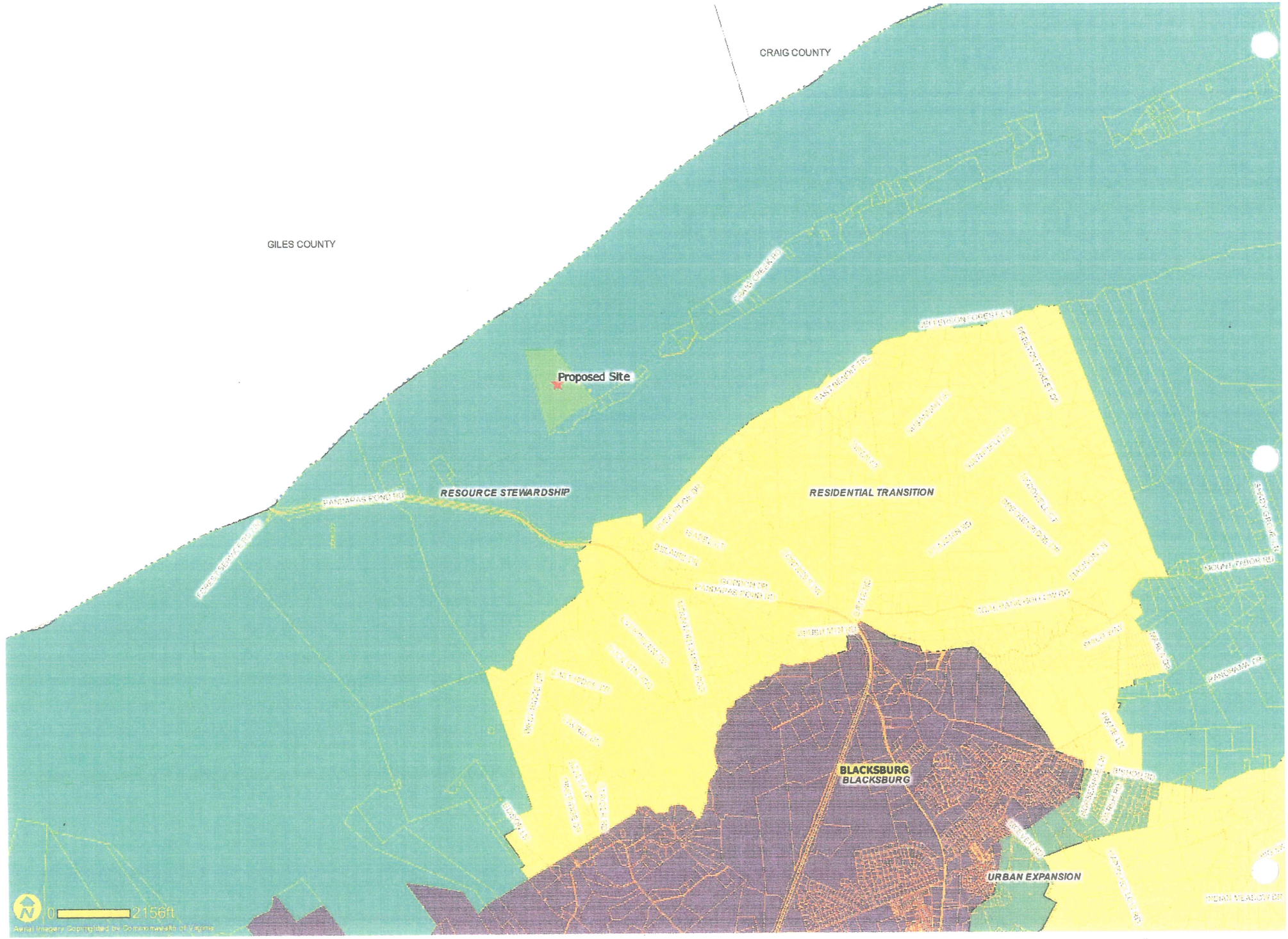
CRAIG COUNTY
GILES COUNTY
Proposed Site
RESOURCE STEWARDSHIP
RESIDENTIAL TRANSITION
BLACKSBURG
BLACKSBURG
URBAN EXPANSION
0
2156ft
Aerial Imagery Copyrighted by Commonwealth of Virginia

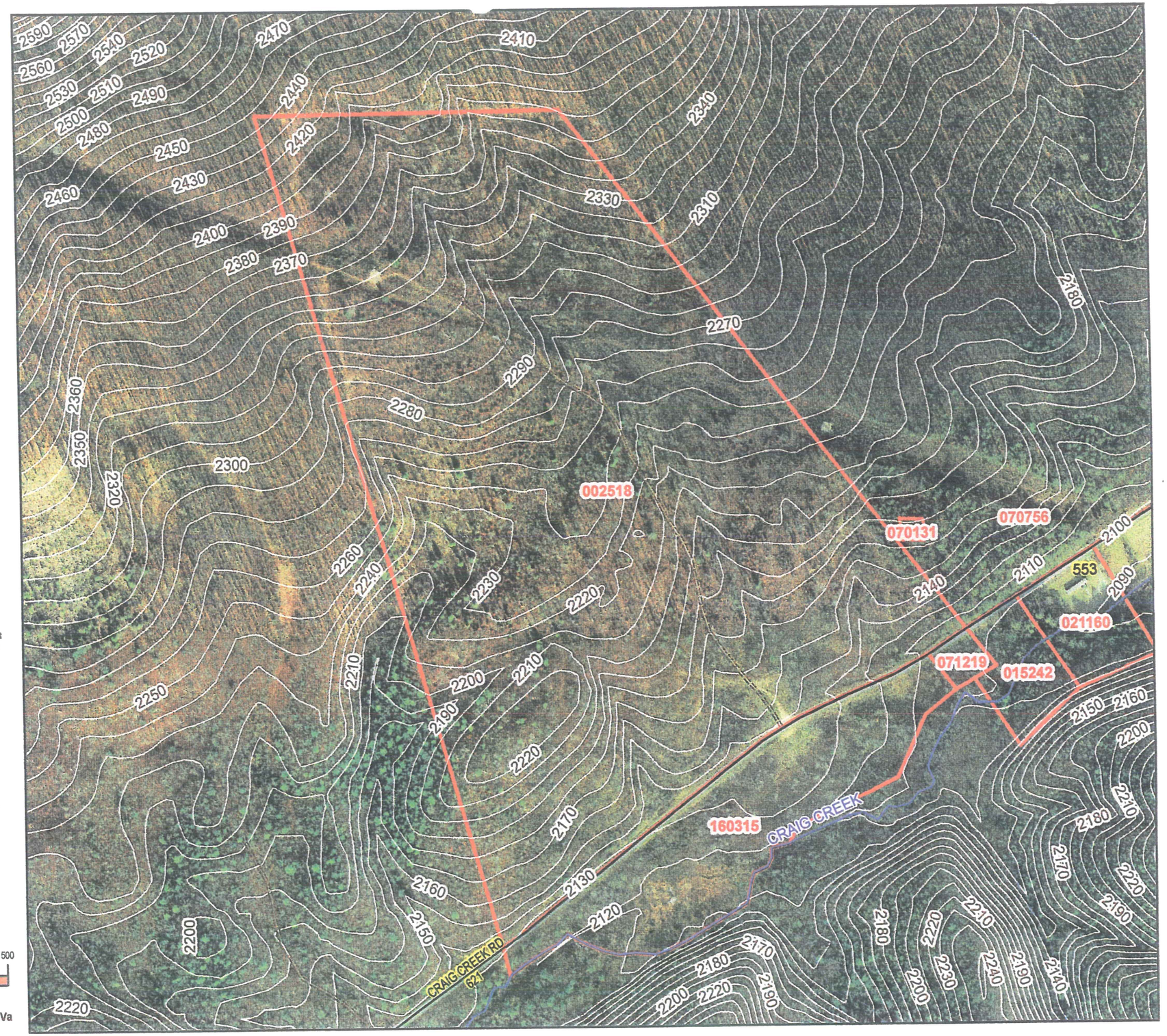

N
W E
S

Legend

- Corporate Boundary
- Rural Communities
- State Roads
- Interstate
- Planned Highway
- Private
- Bburg Roads
- Cburg Roads
- Railroads
- VT/Montgomery Executive Airport
- Unnamed Roads Paths Trails
- Major Rivers Streams
- Streams Creeks
- MontVa 10 Ft Contours
- East Tenn Gas Line
- Tax Parcels
- MontVa Lot #'s
- Hospitals

Montgomery County, Virginia
DISCLAIMER

THE INFORMATION SHOWN HEREON IS TO BE USED FOR REFERENCE PURPOSES ONLY AND IS NOT TO BE CONSTRUED OR USED AS A LEGAL OR OFFICIAL DETERMINATION OF OFFICIAL COUNTY, STATE, AND FEDERAL RECORDS. DATA IS BELIEVED TO BE ACCURATE, BUT IS NOT GUARANTEED.

EXACT LOCATION OF ANY FLOOD ZONE, PROPERTY LINES OR EASEMENTS SHALL BE CERTIFIED BY LICENSED LAND SURVEYOU, ENGINEER, OR ARCHITECT.

CONTOURS SHOWN ARE FOR VISUAL REFERENCE. TO AVOID THE RISK OF MISINTERPRETATION, INVALID RESULTS, AND ERRONEOUS CONCLUSIONS, ORIGINAL LIDAR GENERATED CONTOUR DATA SHOULD BE USED FOR LAND DEVELOPMENT, SURVEY AND ENGINEERING PURPOSES.

AERIAL IMAGERY © 2002/2007 COMMONWEALTH OF VIRGINIA

0 62.5 125 250 375 500
Feet

Prepared by Montgomery County, Va
Planning & GIS Services

MORTON BUILDINGS GENERAL SPECIFICATIONS

LAMINATED COLUMNS - NO. 1 OR BETTER SOUTHERN YELLOW PINE NAIL LAMINATED 3 MEMBER S4S COLUMNS USED IN MORTON BUILDINGS ARE PRESSURE TREATED FOR INSTALLATION BELOW GRADE TO A RETENTION OF 0.8 POUNDS PER CUBIC FOOT WITH CHROMATED COPPER ARSENATE TYPE III, OXIDE IN CONFORMANCE WITH USEPA GUIDELINES AND AWPA STANDARD C28. THE TREATED PORTION OF THE COLUMN EMBEDDED IN GROUND SHALL BE LAMINATED WITH STAINLESS STEEL NAILS.

FOOTINGS AND ANCHORAGE - COLUMN HOLES ARE DUG A MINIMUM DEPTH OF 4'-8" BELOW GRADE (SEE PLANS FOR DIAMETER AND DEPTH). COLUMNS WITH GALVANIZED SUPPORT STILTS ARE PLACED IN THE HOLE. CONCRETE (MINIMUM COMPRESSIVE STRENGTH 2500 PSI) IS POURED IN PLACE TO THE SPECIFIED THICKNESS (SEE PLANS FOR REQUIRED THICKNESS ABOVE AND BELOW THE COLUMN). THE COLUMN IS THEN BACKFILLED WITH SOIL AND COMPACTED AT 8" INTERVALS OR BACKFILLED WITH CONCRETE (SEE PLANS).

TREATED LUMBER – PRESSURE PRESERVATIVE TREATED LUMBER OTHER THAN LAMINATED COLUMNS ARE NO. 1 OR BETTER SOUTHERN YELLOW PINE AND CENTER MATCHED OR NOTCHED AND GROOVED OR S4S. PRESSURE TREATMENT TO GROUND CONTACT RETENTION WITH PRESERVATIVE TREATMENT COMPLYING WITH USE CATEGORY UC4B (AWPA OR ICC-ES) AND IN COMPLIANCE WITH USEPA GUIDELINES AND STANDARDS.

FRAMING LUMBER - SIDING NAILERS ARE 2x4 S4S OR 2x6 SPF NO. 2 OR BETTER SPACED APPROXIMATELY 36" O.C. WITH ALL JOINTS STAGGERED AT ATTACHMENT TO COLUMNS. ROOF PURLINS ARE 2x4 S4S NO. 2 OR BETTER ON EDGE SPACED APPROXIMATELY 24" O.C. ALL OTHER FRAMING LUMBER IS NO. 2 OR BETTER.

ROOF TRUSSES - FACTORY ASSEMBLED WITH 18 OR 20 GAUGE GALVANIZED STEEL TRUSS PLATES AS REQUIRED AND KILN DRIED LUMBER AS SPECIFIED, IN-PLANT QUALITY CONTROL INSPECTION IS CONDUCTED UNDER THE AUSPICES OF THE TPI INSPECTION BUREAU. TRUSSES ARE DESIGNED IN ACCORDANCE WITH CURRENT STANDARDS AND SPECIFICATIONS FOR THE STATED LOADING.

ROOFING PANELS (FLUOROFLEX 1000 ™) - 0.019" MIN., G90 GALVANIZED OR AZ55 GALVALUME STEEL WITH AN ADDITIONAL BAKED-ON 70% PVDF FINISH WITH A NOMINAL 1 MIL. PAINT THICKNESS ON EXTERIOR.

TRIM - DIE-FORMED TRIM OF 0.017" MIN., G90 GALVANIZED OR AZ55 GALVALUME STEEL ON GABLES, RIDGES, CORNERS, BASE WINDOWS, AND DOORS WITH SAME FINISH AS ROOFING OR SIDING PANELS.

GUTTERS - 5" K-STYLE, .030 HIGH TENSILE ALUMINUM GUTTER, 70% PVDF FINISH TO MATCH TRIM, ON BOTH SIDES OF THE BUILDING.
2x4F1F1 02/12

DESIGN AND EXPLANATORY NOTES

1.) ALL PLOT PLANS AND RELATED DETAILS SHALL BE PROVIDED BY OWNER UNLESS INCORPORATED AS PART OF THESE DRAWINGS.

2.) MORTON BUILDINGS GENERAL SPECIFICATIONS APPLY UNLESS INDICATED DIFFERENTLY ON SPECIFIC JOB DRAWINGS OR SUPPLEMENTAL INFORMATION.

3.) MINIMUM LIVE ROOF LOAD DESIGNS FOR CONSTRUCTION, MAINTENANCE, REPAIR, AND OTHER TEMPORARY LOADS PER SECTION 1607.11.2
   a.) ROOF PURLINS AND OTHER SECONDARY STRUCTURAL MEMBERS = 20 PSF
   b.) ROOF TRUSSES, HEADERS, COLUMNS AND OTHER PRIMARY STRUCTURAL MEMBER = 18 PSF
   c.) FOOTINGS = 18 PSF (DESIGNED FOR ROOF SNOW LOAD AND OTHER NON-TEMPORARY LOADS W/ APPROVAL FROM BUILDING OFFICIAL).

4.) NO ONE MAY ALTER ANY ENGINEERING ITEM UNLESS ACTING UNDER THE DIRECTION OF THE LICENSED / REGISTERED ENGINEER .

5.) ◆ THE PRECEDING SYMBOL IDENTIFIES ITEMS THROUGHOUT THE PLANS THAT ARE NOT PROVIDED BY MORTON BUILDINGS, INC. OR MORTON BUILDINGS' SUBCONTRACTORS AND ARE THE OWNER'S RESPONSIBILITY.

ALLIED DESIGN

SHEET INDEX	
SHEET#	DESCRIPTION
G1 OF G1	SPECIFICATIONS & SHEET INDEX
S1 OF S6	COLUMN PLAN
S2 OF S6	TRUSS & BRACING PLAN, DETAIL A, DETAIL B, TRUSS TIE DETAIL
S3 OF S6	TRUSS DRAWING, PURLIN DETAIL
S4 OF S6	ELEVATIONS
S5 OF S6	SECTION A, DETAILS
S6 OF S6	SECTION B, SECTION C, SECTION C, DETAILS

CURRENT LUMBER SPECIFICATIONS (06-01-2013)		
SIZE	DESCRIPTION	BENDING VALUE Fb
2x4	NO. 2 SPF	1313 PSI
2x4	NO. 1 SYP	1500 PSI
2x4	2100f MSR SPF	2100 PSI
2x6	NO. 2 SPF	1138 PSI
2x6	NO. 1 SYP	1350 PSI
2x6	2100f MSR SPF	2100 PSI
2X6	2400 MSR SYP	2400 PSI
2x8	NO. 1 SYP	1250 PSI
2x8	2400 MSR SYP	2400 PSI
2x10	NO. 1 SYP	1050 PSI
2x10	2400 MSR SYP	2400 PSI
2x12	NO. 1 SYP	1000 PSI
2x12	2250f MSR SYP	2250 PSI
1 1/2"x16"	LAMINATED VENEER LUMBER	2800 PSI
3 1/2"x15"	GLU-LAM	1650 PSI
5 1/4"x16 1/2"	GLU-LAM	2400 PSI
5 1/4"x19 1/2"	GLU-LAM	2400 PSI

BUILDING DESIGN CRITERIA	
USE GROUP	R-5
CONSTRUCTION TYPE	VB
MIN. LIVE ROOF LOAD DESIGN	SEE NOTE #3
ROOF SNOW LOAD *	18 PSF
WIND SPEED (V_{ult})	90 MPH
BUILDING AREA	3456 SQ. FT.
GROUND SNOW LOAD	30 PSF

*ROOF SNOW LOAD CALCULATIONS

Ps = 0.7 x Ce x I x Pg x Ct x Cs
Ce = SNOW EXPOSURE FACTOR = 1.0
I = IMPORTANCE FACTOR = 0.8
Pg = GROUND SNOW LOAD = 30 PSF
Ct = THERMAL FACTOR = 1.2
Cs = ROOF SLOPE FACTOR = 0.86
Ps = 0.7 x 1.0 x 0.8 x 30 x 1.2 x 0.86 = 17.4 PSF

I HEREBY CERTIFY THAT THE STRUCTURAL DESIGN FOR THIS BUILDING WAS PREPARED BY ME OR UNDER MY DIRECT SUPERVISION AND THAT I AM A DULY LICENSED/REGISTERED PROFESSIONAL ENGINEER.

RONALD L. SUTTON, P.E.
MICHAEL L. MCCORMICK, P.E.
DATE: 10.08.14 REG.#_____

COMMONWEALTH OF VIRGINIA
RONALD L. SUTTON
No. 12434
PROFESSIONAL ENGINEER

OFFICE: ROANOKE, VA
JOB NO. 157-043778

JOHN BARR
BLACKSBURG, VA

VA ALLIED DESIGN ARCHITECTURAL & ENGINEERING GROUP, P.C.
100 S. PERSHING P.O. BOX 110 MORTON, IL 61550 FIRM CORP # 0405001186 PHONE NUMBER: 309-263-4105

DRAWN BY:	KCONLEY
DATE:	9/21/2014
CHECKED BY:	V.DEVERA
DATE:	10/3/2014
REVISED DATE:	---
REVISED DATE:	---
REVISED DATE:	---
REVISED DATE:	---

SCALE: AS NOTED
SHEET NO. G1 OF G1

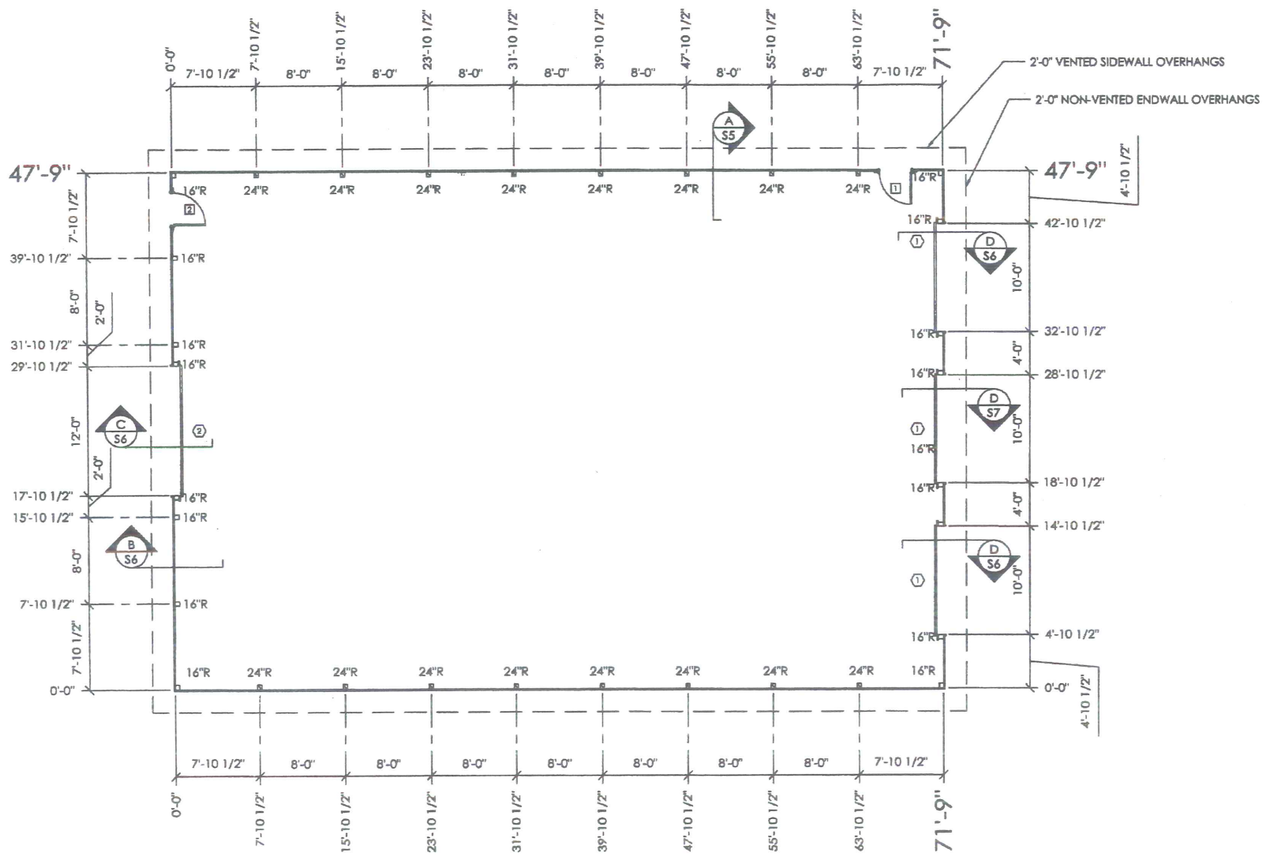

COLUMN PLAN LEGEND

- ▫ - 3-2x6 LAMINATED COLUMN LOCATION
- ▪ - 3-2x6 LAMINATED COLUMN W/ 2x6 STIFFENER LOCATION
- 1 - 3068 9-LITE TEMPERED GLASS IN LEAF WITH EMBOSSED CROSSBUCK FIBERSTEEL WALKDOOR(S), IN SWING, RIGHT HINGE WITH LOCKSET, SINGLE CYLINDER DEADBOLT
- 2 - 3068 9-LITE TEMPERED GLASS IN LEAF WITH EMBOSSED CROSSBUCK FIBERSTEEL WALKDOOR(S), IN SWING, LEFT HINGE WITH LOCKSET, SINGLE CYLINDER DEADBOLT
- ① - (3) 10'-2" x 9'-1" OVERHEAD DOOR(S) WITH CORNER ENCLOSURES ◆
- ② - 12'-2" x 12'-1" OVERHEAD DOOR(S) WITH CORNER ENCLOSURES ◆
- (2) 3'-6" X 3'-6" CUPOLA WITH "M" 30" WEATHERVANE NON-FUNCTIONAL
- ROOF STEEL FASTENED WITH STAINLESS STEEL SCREWS

16"R - 16" DIAMETER FOOTING WITH 8" THICK MINIMUM READY-MIX CONCRETE BELOW BOTTOM OF LOWER COLUMN WITH ADDITIONAL READY-MIX TO TOP OF 218M STILT (9"±). PLACE CONCRETE BELOW AND ABOVE BOTTOM OF LOWER COLUMN IN ONE OPERATION.

24"R - 24" DIAMETER FOOTING WITH 10" THICK MINIMUM READY-MIX CONCRETE BELOW BOTTOM OF LOWER COLUMN WITH ADDITIONAL READY-MIX TO TOP OF 224M STILT (9"±). PLACE CONCRETE BELOW AND ABOVE BOTTOM OF LOWER COLUMN IN ONE OPERATION.

COLUMN PLAN

ROUGH OPENING SCHEDULE

UNIT SYMBOL FROM LEGEND	WIDTH	HEIGHT
1	38 1/4"	81"
2	38 1/4"	81"

N

SCALE: 2' 8' / 1' 4' 16'

OFFICE: ROANOKE, VA

JOB NO. 157-043778

JOHN BARR

BLACKSBURG, VA

ALLIED DESIGN ARCHITECTURAL & ENGINEERING GROUP, P.C.

100 S. PERSHING P.O. BOX 110 MORTON, IL 61550 VA

PHONE NUMBER: 309-263-4105

FIRM OF CORP # 0405001185

DRAWN BY:	KCONLEY
DATE:	9/21/2014
CHECKED BY:	V.DEVERA
DATE:	10/3/2014
REVISED DATE:	—
REVISED DATE:	—
REVISED DATE:	—
REVISED DATE:	—

COMMONWEALTH OF VIRGINIA
RONALD L. BUTTON
No. 12434
PROFESSIONAL ENGINEER

10.08.14

SCALE: AS NOTED

SHEET NO. S1 OF S6

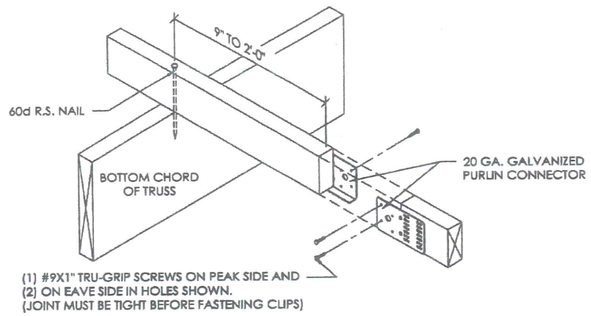

2x4 TRUSS TIE DETAIL

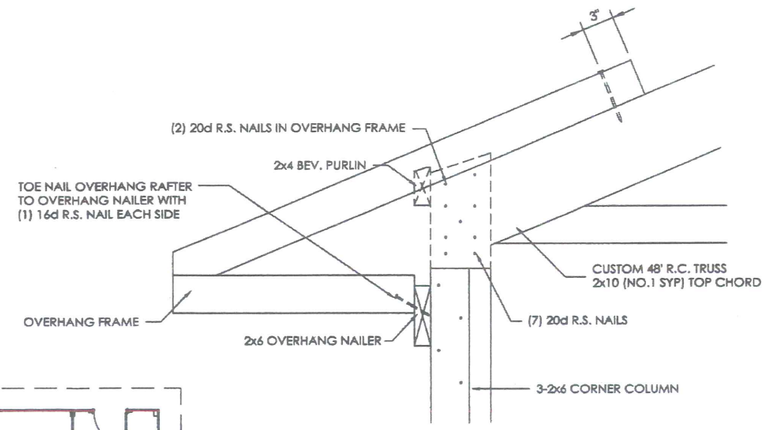

DETAIL A

SCALE: 1 1/2" = 1'-0"

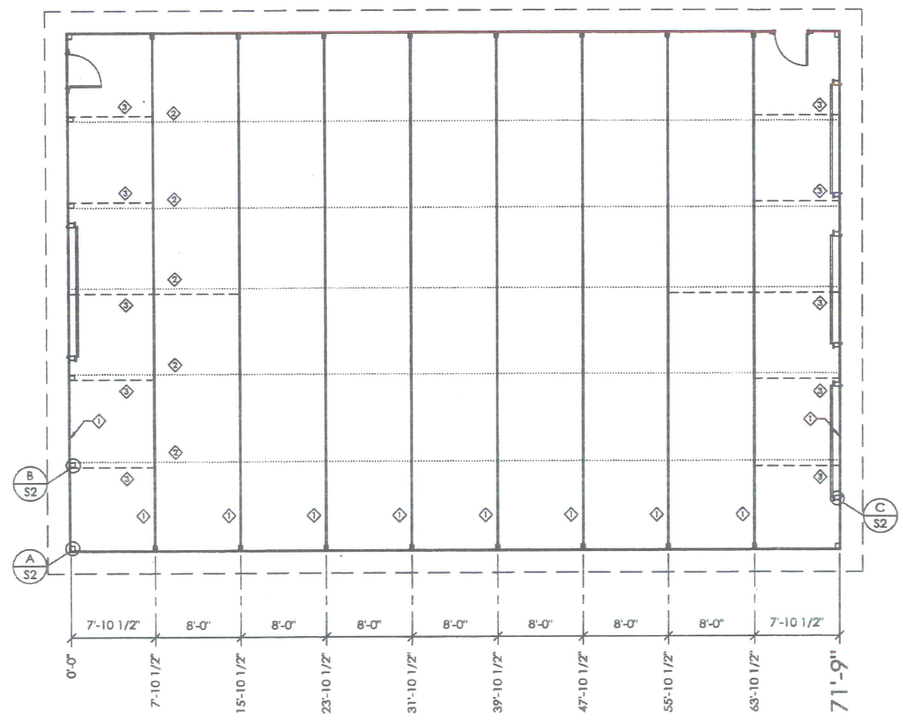

TRUSS/BRACING PLAN

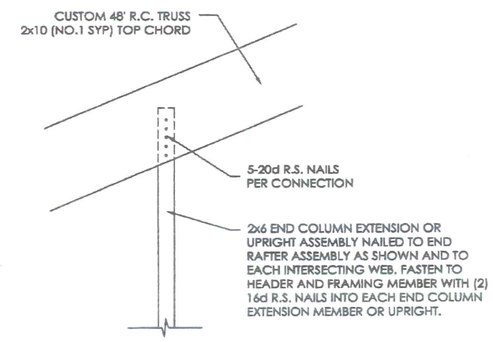

DETAIL B

SCALE: 1 1/2" = 1'-0"

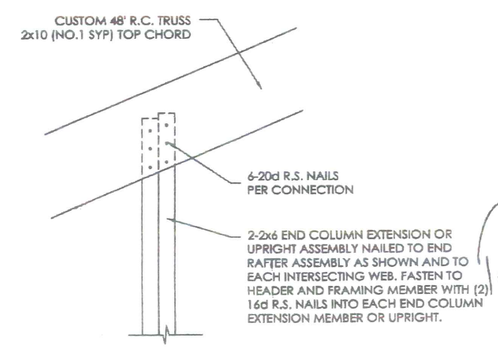

DETAIL C

SCALE: 1 1/2" = 1'-0"

TRUSS/BRACING PLAN LEGEND

1. - 48' CUSTOM TRUSSES @ 8'-0" O.C.
2. - 2x4 TRUSS TIES @ 8'-0" O.C.
3. - 2x6 DIAGONAL END BRACES @ 8'-0" O.C.

N

SCALE: 2' 8' 1' 4' 16'

OFFICE: ROANOKE, VA

JOB NO. 157-043778

JOHN BARR

BLACKSBURG, VA

VA ALLIED DESIGN ARCHITECTURAL & ENGINEERING GROUP, P.C.

100 S. PERSHING P.O. BOX 110 MORTON, IL 61550 FOR CORP # 0405001185 PHONE NUMBER: 309-263-4105

DRAWN BY:	KCONLEY
DATE:	9/21/2014
CHECKED BY:	V.DEVERA
DATE:	10/3/2014
REVISED DATE:	—
REVISED DATE:	—
REVISED DATE:	—
REVISED DATE:	—

COMMONWEALTH OF VIRGINIA
RONALD L. SUTTON
No. 12434
PROFESSIONAL ENGINEER

10.08.14

SCALE: AS NOTED

SHEET NO. S2 OF S6

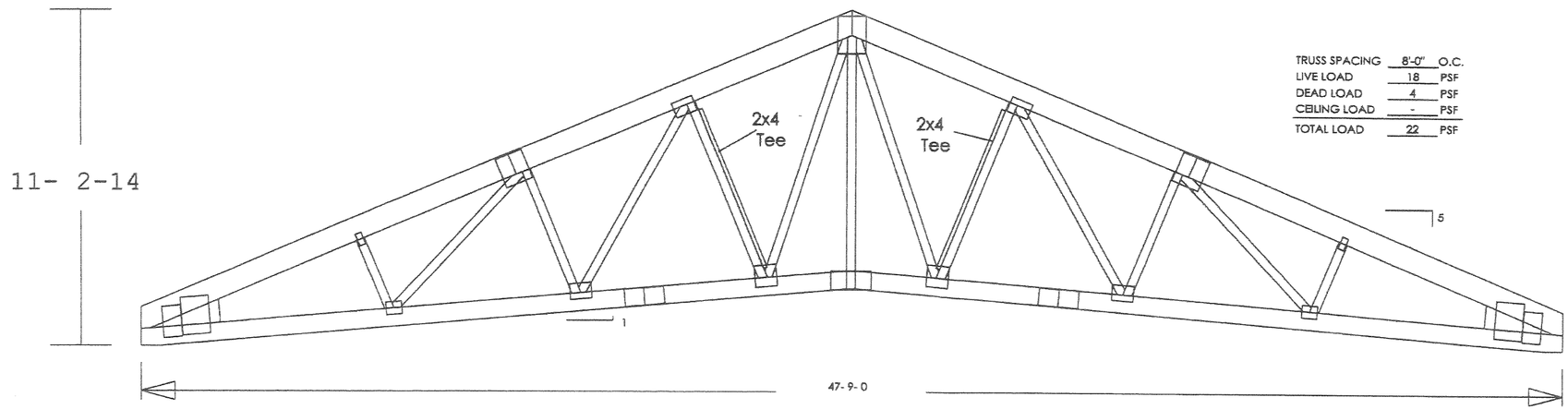

TRUSS SPACING	8'-0"	O.C.
LIVE LOAD	18	PSF
DEAD LOAD	4	PSF
CEILING LOAD	-	PSF
TOTAL LOAD	22	PSF

48' CUSTOM R.C. TRUSS

SCALE: 3/8" = 1'-0"

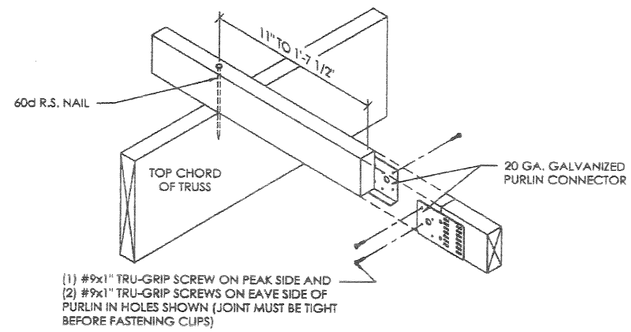

2x4 BUTTED PURLIN DETAIL

(PURLIN CONNECTED WITH 60D R.S. NAIL)

SCALE: 1 1/2" = 1'-0"

OFFICE: ROANOKE, VA

JOB NO. 157-043778

JOHN BARR

BLACKSBURG, VA

ALLIED DESIGN ARCHITECTURAL & ENGINEERING GROUP, P.C.

VA

100 S. PERSHING P.O. BOX 110 MORTON, IL 61550 PROF CORP # 0405001185 PHONE NUMBER: 309-263-4105

DRAWN BY:	KCONLEY
DATE:	9/21/2014
CHECKED BY:	V.DEVERA
DATE:	10/3/2014
REVISED DATE:	---
REVISED DATE:	---
REVISED DATE:	---
REVISED DATE:	---

COMMONWEALTH OF VIRGINIA

RONALD L. SUTTON

No. 12434

PROFESSIONAL ENGINEER

10.08.14

SCALE: AS NOTED

SHEET NO.

S3 OF S6

DESIGN AND EXPLANATORY NOTES

1.) EXTERIOR DOOR AND WINDOW LOCATIONS ARE TAKEN FROM THE EXTERIOR FACE OF THE NAILERS AND ARE TO THE CENTER OF THE DOOR AND WINDOW UNITS. VERIFY ALL DOOR, WINDOW, SKYLIGHT AND SIDELIGHT LOCATIONS WITH THE OWNER.

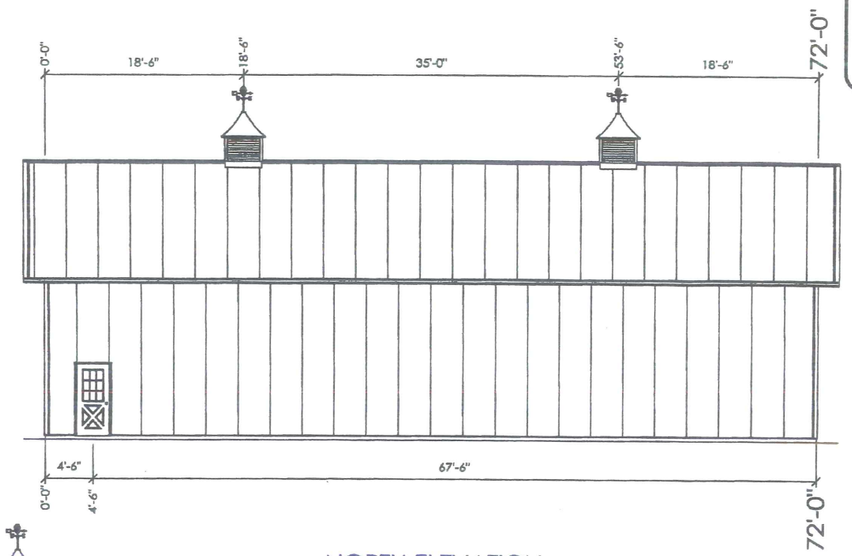

NORTH ELEVATION

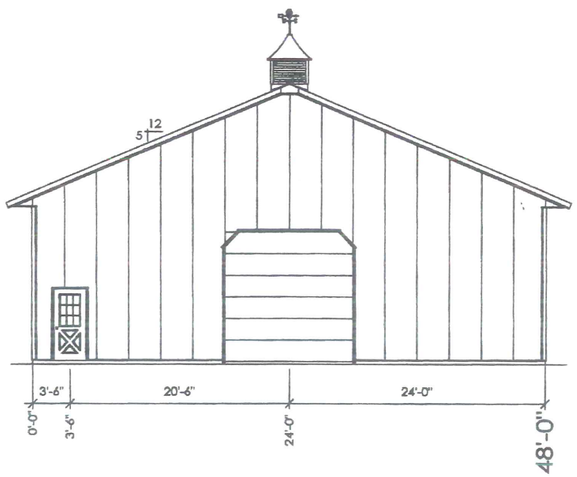

WEST ELEVATION

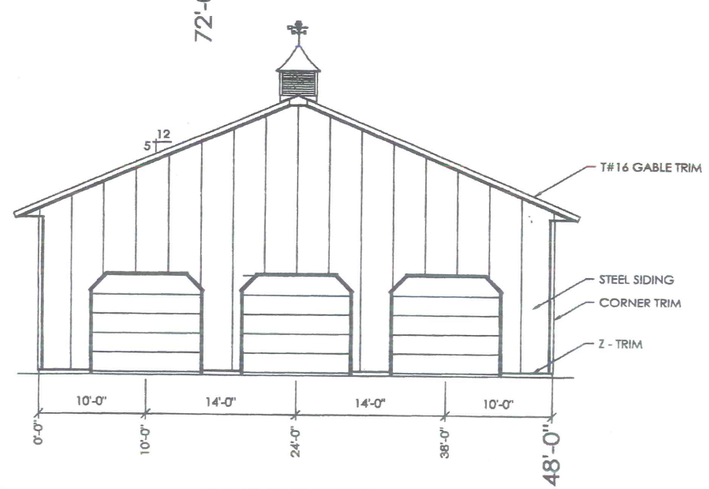

EAST ELEVATION

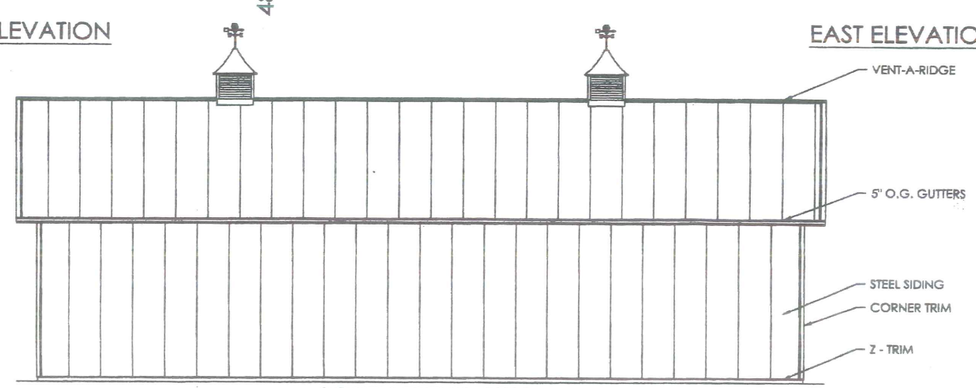

SOUTH ELEVATION

SCALE: 2' 8' 1' 4' 16'

OFFICE: ROANOKE, VA

JOB NO. 157-043778

JOHN BARR

BLACKSBURG, VA

ALLIED DESIGN ARCHITECTURAL & ENGINEERING GROUP, P.C.

VA

100 S. PERSHING P.O. BOX 110 MORTON, IL 61550 PROF. CORP. # 0405001185

PHONE NUMBER: 309-263-4105

DRAWN BY:	KCONLEY
DATE:	9/21/2014
CHECKED BY:	V.DEVERA
DATE:	10/3/2014
REVISED DATE:	—
REVISED DATE:	—
REVISED DATE:	—
REVISED DATE:	—

COMMONWEALTH OF VIRGINIA
RONALD L. SUTTON
No. 12434
PROFESSIONAL ENGINEER

10.08.14

SCALE: AS NOTED

SHEET NO. S4 OF S6

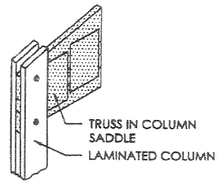

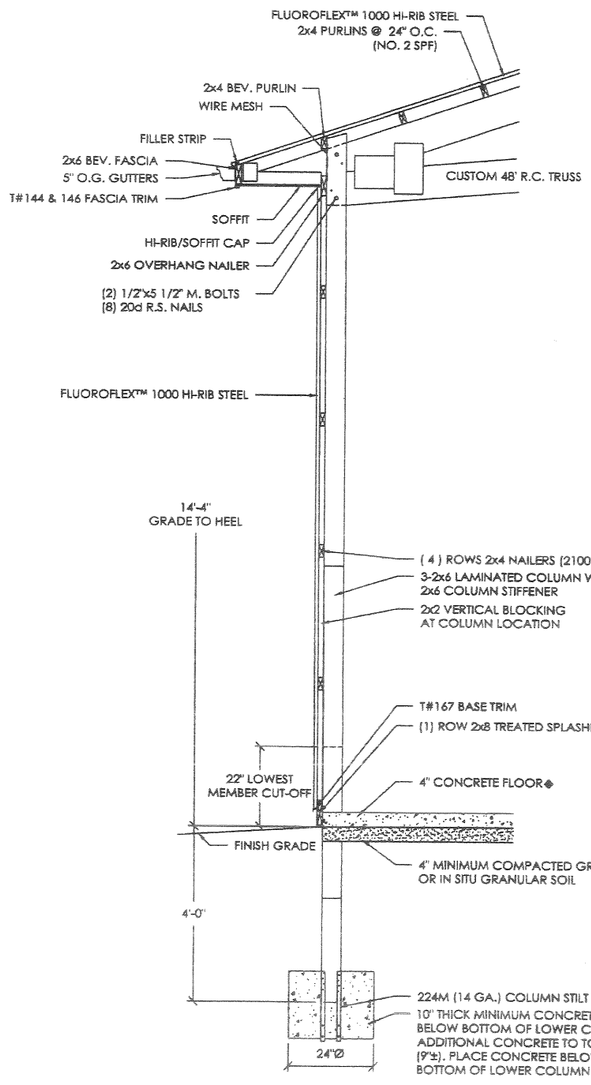

SIDEWALL SECTION A

SCALE: 1/2" = 1'-0"

DESIGN AND EXPLANATORY NOTES

1.) FOOTINGS ARE DESIGNED FOR A 2000 PSF SOIL BEARING CAPACITY. LOCAL CONDITIONS MAY REQUIRE MODIFICATIONS.

2.) CONCRETE FLOOR NOTES:

a. 3500 PSI, 5 1/2 BAG MIX CONCRETE
b. SLOPE GRADE AWAY FROM BUILDING @ 1" PER FOOT FOR A MINIMUM DISTANCE OF 10' PLUS OVERHANG WIDTH
c. A VAPOR RETARDER IS NOT MANDATED PER IBC SECTION 1910 EXCEPTION 3. UNLESS THE FLOOR WILL BE COVERED BY MOISTURE SENSITIVE FLOORING MATERIALS OR IMPERMEABLE FLOOR COATINGS OR WHERE THE FLOOR WILL BE IN CONTACT WITH ANY MOISTURE SENSITIVE EQUIPMENT OR PRODUCT
d. CONTRACTION JOINTS UNIFORMLY SPACED 12' O.C. OR LESS

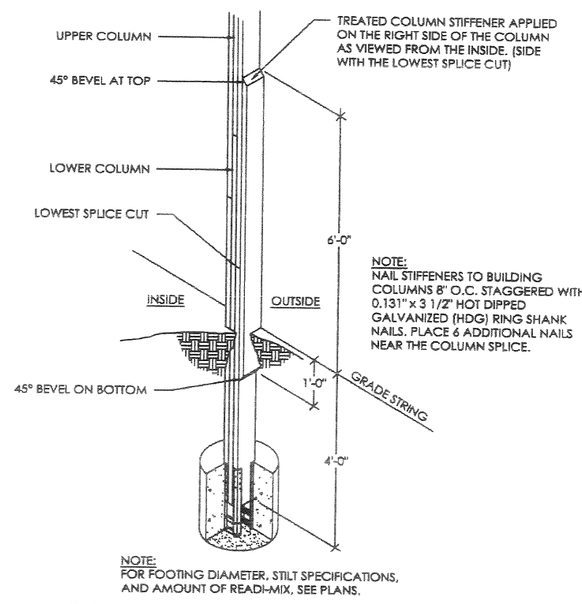

NOTE:
NAIL STIFFENERS TO BUILDING COLUMNS 8" O.C. STAGGERED WITH 0.131" x 3 1/2" HOT DIPPED GALVANIZED (HDG) RING SHANK NAILS. PLACE 6 ADDITIONAL NAILS NEAR THE COLUMN SPLICE.

NOTE:
FOR FOOTING DIAMETER, STILT SPECIFICATIONS, AND AMOUNT OF READI-MIX, SEE PLANS.

COLUMN SPLICE STIFFENER DETAIL

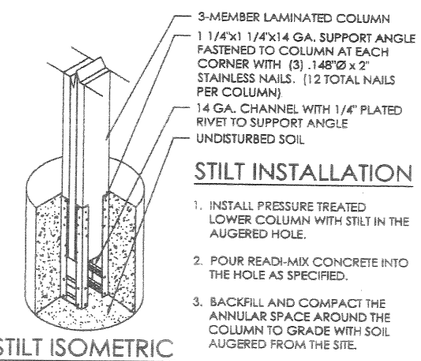

STILT INSTALLATION

1. INSTALL PRESSURE TREATED LOWER COLUMN WITH STILT IN THE AUGERED HOLE.
2. POUR READI-MIX CONCRETE INTO THE HOLE AS SPECIFIED.
3. BACKFILL AND COMPACT THE ANNULAR SPACE AROUND THE COLUMN TO GRADE WITH SOIL AUGERED FROM THE SITE.

STILT ISOMETRIC

OFFICE: ROANOKE, VA
JOB NO. 157-043778

JOHN BARR
BLACKSBURG, VA

ALLIED DESIGN ARCHITECTURAL & ENGINEERING GROUP, P.C.
VA
100 S. PERSHING P.O. BOX 110 MORTON, IL 61550
PHONE NUMBER: 309-263-4105
VA OFF. COA # 0405001185

DRAWN BY:	KCONLEY
DATE:	9/21/2014
CHECKED BY:	V.DEVERA
DATE:	10/3/2014
REVISED DATE:	---
REVISED DATE:	---
REVISED DATE:	---
REVISED DATE:	---

COMMONWEALTH OF VIRGINIA
RONALD L. SUTTON
No. 12634
PROFESSIONAL ENGINEER
10.03.14

SCALE: AS NOTED
SHEET NO.
S5 OF S6

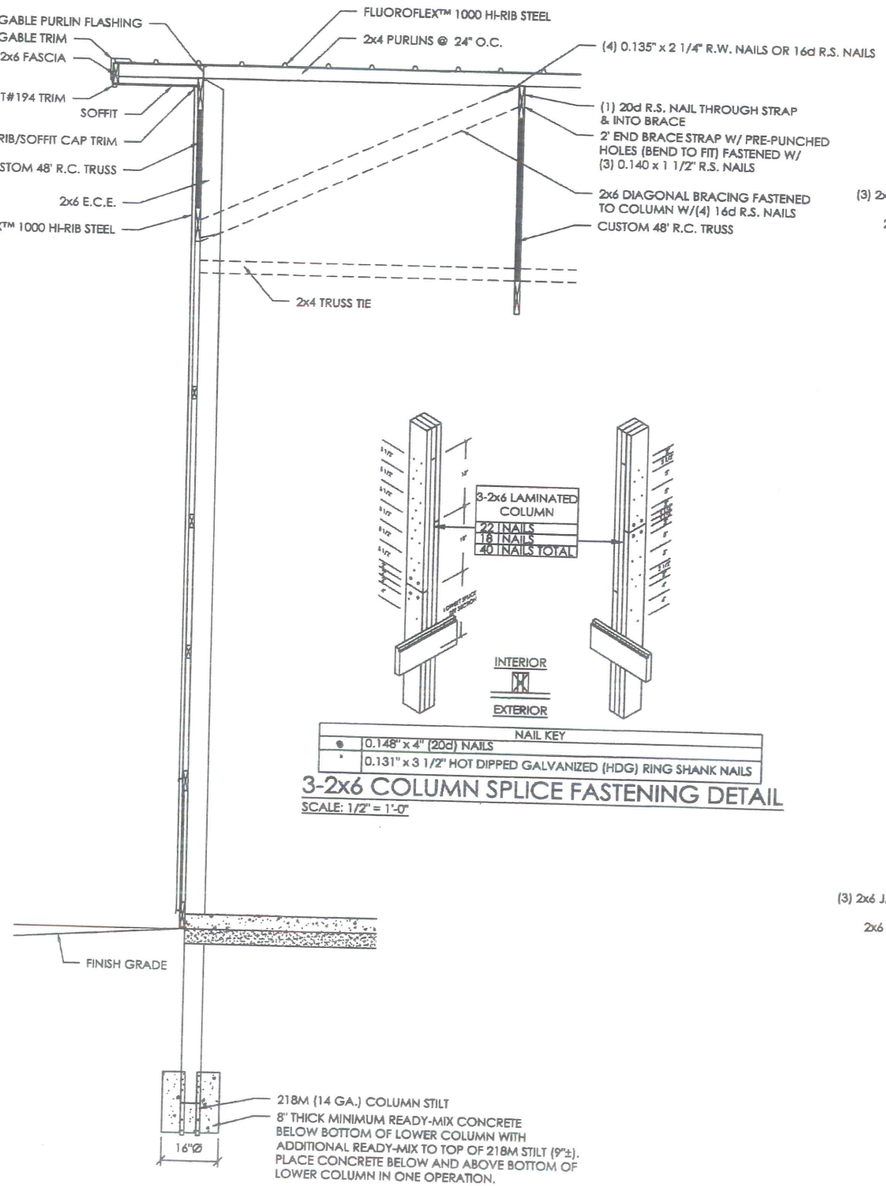

ENDWALL SECTION B

SCALE: 1/2" = 1'-0"

NAIL KEY	
●	0.148" x 4" (20d) NAILS
•	0.131" x 3 1/2" HOT DIPPED GALVANIZED (HDG) RING SHANK NAILS

3-2x6 COLUMN SPLICE FASTENING DETAIL

SCALE: 1/2" = 1'-0"

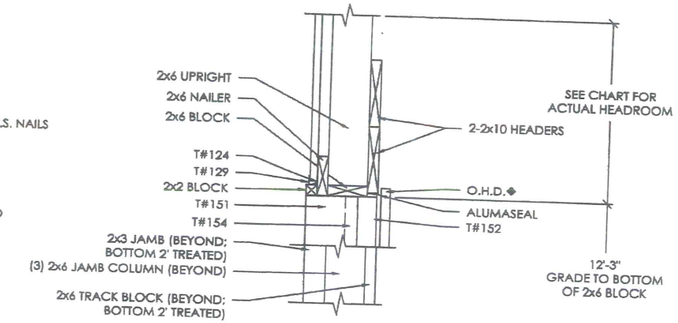

OHD HEADER SECTION C

SCALE: 1" = 1'-0"

HEADER NAILING SCHEDULE		
HEADER MEMBER	UPRIGHT	JAMB COLUMN
EA. 2X10	5	5

NOTES:
1. NUMBERS ABOVE ARE 20d R.S. NAILS REQUIRED PER CONNECTION.
2. PRE-DRILL HEADERS AS REQUIRED TO PREVENT SPLITTING.
3. IF NUMBER OF NAILS REQUIRED FOR HEADER TO JAMB COLUMN CONNECTION IS EXCESSIVE TO CAUSE SPLITTING, THE EXCESS NAILS MAY BE INSTALLED IN HEADER SUPPORT BLOCKING.

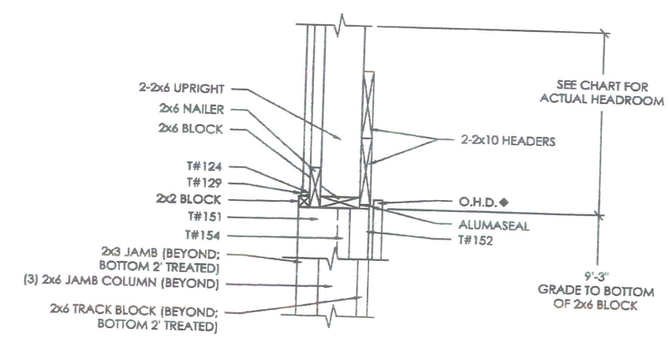

OHD HEADER SECTION D

SCALE: 1" = 1'-0"

OFFICE: ROANOKE, VA
JOB NO. 157-043778

JOHN BARR
BLACKSBURG, VA

ALLIED DESIGN ARCHITECTURAL & ENGINEERING GROUP, P.C.
VA
100 S. PERSHING P.O. BOX 110 MORTON, IL 61550 PROF. CORP # 0405001185
PHONE NUMBER: 309-263-4105

DRAWN BY:	KCONLEY
DATE:	9/21/2014
CHECKED BY:	V.DEVERA
DATE:	10/3/2014
REVISED DATE:	---
REVISED DATE:	---
REVISED DATE:	---
REVISED DATE:	---

COMMONWEALTH OF VIRGINIA
RONALD L. BUTTON
No. 13434
PROFESSIONAL ENGINEER

10.08.14

SCALE: AS NOTED
SHEET NO. S6 OF S6

AT A REGULAR MEETING OF THE BOARD OF SUPERVISORS OF THE COUNTY OF MONTGOMERY, VIRGINIA HELD ON THE 10th DAY OF MAY, 2010 AT 6:00 P.M. IN THE BOARD CHAMBERS, MONTGOMERY COUNTY GOVERNMENT CENTER, 755 ROANOKE STREET, CHRISTIANSBURG, VIRGINIA:

R-FY-10-168
SPECIAL USE PERMIT
KELLY L. BURDETTE AND JOHN A. BARR JR.
FOR THE PURPOSE OF ALLOWING A COMMERCIAL KENNEL
IN AN AGRICULTURE (A-1) ZONING DISTRICT
IN THE MOUNT TABOR MAGISTERIAL DISTRICT (DISTRICT A)
PARCEL ID: 002518; TAX MAP NO. 015-A-1

On a motion by Mary W. Biggs, seconded by William H. Brown and carried unanimously,

BE IT RESOLVED, By the Board of Supervisors of Montgomery County, Virginia that the request by Kelly L. Burdette and John A. Barr Jr. for a special use permit to allow a commercial kennel and two (2) accessory structures in excess of 1,200 sq. ft. in area and 18 ft. in height is consistent with the County's Comprehensive Plan and is hereby approved with the following conditions:

1. Kennel operations shall be limited to the breeding, raising, and selling of dogs and/or puppies owned by the property owner.
2. A yearly kennel license for no more than 50 dogs shall be obtained as required by Montgomery County Code.
3. The proposed accessory structures as shown on "Sketch Showing Proposed House & Kennel" prepared by Berkman Land Surveying, dated February 24, 2010 (Job No. 09093) shall be limited in size as follows:
   a. Building 1 shall not exceed 3,600 square feet in area and 27 ft. in overall height.
   b. Building 2 shall not exceed 1,680 square ft. in area and 20 ft. in overall height.
4. Accessory structures shall be used for personal and kennel use only. Retail sales and/or other commercial activities shall not be permitted.

5. The accessory structures shall not be used as a dwelling, accessory or otherwise without obtaining the proper permits and approvals from the Zoning Administrator, Health Department, and Building Official.

The property is located on the north side of Craig Creek Road (Rt. 621), approximately 0.80 miles east of the intersection with Pandapas Pond Rd. (US 460), and is identified as Tax Parcel No. 015-A-1 (Acct # 002518) in the Mount Tabor Magisterial District (District A). The property currently lies in an area designated as Resource Stewardship in the 2025 Comprehensive Plan.

The vote on the foregoing resolution was as follows:

AYE	NAY
Gary D. Creed	None
William H. Brown	
Mary W. Biggs	
Doug Marrs	
James D. Politis	
John A. Muffo	
Annette S. Perkins	

ATTEST: F. Craig Meadows

F. Craig Meadows
County Administrator