MONTGOMERY COUNTY DEPARTMENT OF
PLANNING & GIS SERVICES

PLANNING
GIS & MAPPING

755 ROANOKE STREET, SUITE 2A, CHRISTIANSBURG, VIRGINIA 24073-3177

**MEMORANDUM**

TO: Christopher Tuck, Chair
Montgomery Co. Board of Supervisors

FROM: Robert Miller, Chair
Montgomery Co. Planning Commission

DATE: February 11, 2016

RE: **Special Use Permit (SU-2016-13623)**

A request by **Appalachian Power Company** for a Special Use Permit to allow expansion of an 138 kv electric substation to upgrade equipment for reliability. The property is located at **1214 Panorama Drive** and is identified as Tax Parcel No. 029- A 6 (Account No. 032009) in the Mount Tabor Magisterial District (District A). The property currently lies in an area designated as Resource Stewardship in the 2025 Comprehensive Plan.

---

During our meeting on February 10, 2016, the Planning Commission discussed the applicant's request for Special Use Permit to allow expansion of an existing electric substation and held the required public hearing. Commission members discussed the phasing of the project with the applicant, the proposed construction easement, and the proposed temporary roads for work to be performed in the transmission line easement.

There were no public comments during the hearing; however, one citizen sent a letter of support for the project (see attached).

Upon a motion by Mr. Kroll, seconded by Mr. Katz and carried by unanimous vote (Hirt absent), the Planning Commission found the request to be in conformance with the Montgomery County 2025 Comprehensive Plan and recommended **approval** of the Special Use Permit to allow expansion of an 138 kv electric substation to upgrade equipment for reliability.

Enclosures: Application Materials

C.L. Draughan Letter of Support

MONTGOMERY COUNTY DEPARTMENT OF
PLANNING & GIS SERVICES

PLANNING
GIS & MAPPING

755 ROANOKE STREET, SUITE 2A, CHRISTIANSBURG, VIRGINIA 24073-3177

**MEMORANDUM**

TO: Planning Commission

FROM: Brea Hopkins, Development Planner

DATE: February 3, 2016

FOR: February 10, 2016 Public Hearing

RE: **Staff Analysis (SU-2016-13623)**
**1214 Panorama Drive – Expansion of Electric Substation**

---

## I. Nature of Request

A request by **Appalachian Power Company** for a special use permit to expand an existing non-conforming electric substation. The expansion will include additional equipment and an upgrade to address provide more reliable electric service.

## II. Location

The property is located at **1214 Panorama Drive** and is identified as Tax Parcel No. 029-A-6 (Acct # 032009) in the Mount Tabor Magisterial District (District A). The 3.559 acre parcel is zoned Agricultural (A-1) and currently lies in an area designated as Resource Stewardship in the 2025 Comprehensive Plan. The parcel is located south of Mount Tabor Rd. (Rt. 624) and north of Panorama Dr.

All adjoining property owners were notified in compliance with the Code of Virginia and Section 10-52(3) of the Montgomery County Code.

## III. Background

The existing substation was constructed in 1965 prior to the requirement for a special use permit and is therefore considered a non-conforming use. Section 10-47(4) Nonconforming uses of the Montgomery County zoning ordinance states that nonconforming uses shall not be expanded beyond the lot area that it occupied on the effective date of the ordinance. The current zoning ordinance allows electric substations by special use permit and thus would allow the expansion of the existing substation if approved.

## IV. Impacts

The proposed improvements include extending the existing yard approximately fifty (50) ft. to the east, installing new upgraded equipment/structures, and replacing/relocating the existing control house. Proposed structures will meet required setbacks for the zoning district.

### 1. Infrastructure

This proposal will have no direct impact upon infrastructure. Neither public water nor public sewer is required for this project.

### 2. Aesthetics

The proposed 50 ft. pad expansion will be ground level and will not alter aesthetics. The proposed busing station is approximately twenty-five (25) ft. in height and is compatible with the existing structures on site. The existing control house will be removed from the property and replaced with a new structure which will be located to an area on the proposed slab expansion. There will be two (2) new transmission line H-frame structures and one new monopole transmission line structure within the transmission line easement; however, those structures are allowed by-right in the Agricultural (A1) zoning district and are not considered part of the special use permit being requested.

## V. Comprehensive Plan

The proposed substation is located in an area designated as Resource Stewardship in the 2025 Comprehensive Plan, which encourages the preservation of scenic and natural resources.

Section UTL 2.0 “Electric, Telecommunication and Gas Utilities Goal” states the following: “Provide for the orderly extension of electric service, telecommunication service (land line, wireless and/or cable) and natural gas service in a manner that supports growth and development without negatively impacting the natural environment.”

Based on a review of the application, the substation will accomplish the above stated goal by extending and enhancing electric service to the citizens and businesses of Montgomery County.

## VI. Analysis

The County has experienced a large amount of growth since the substation was initially constructed in 1965. According to AEP the proposed expansion of the substation is necessary to maintain reliable electric services to all citizens, businesses, industries, etc. located in Montgomery County and provide for additional growth as it occurs.

Plans submitted by AEP indicate the proposed equipment improvements will be located entirely on property already owned by Appalachian Power Company. The company has stated they are in the process of completing the paperwork to obtain a temporary construction/grading easement due to the topography of the site on the eastern property line from the adjoining property owner. This will allow grading for the proposed slab expansion and eliminate the need for a retaining wall type structure.

It should be noted that the MVP Pipeline, as currently proposed, would coincide with the existing transmission line easement in this location. It is unknown at this time if an additional easement for

the pipeline will be necessary. AEP does not expect the pipeline to have an impact on their proposed upgrade.

At the time this report was issued, the Planning and GIS Services had received no inquiries for more information regarding the request. Adjacent property owners and/or other interested parties may also be present at the public hearing to present their views on this request.

## VII. Staff Recommendations

Since the substation has been in existence since 1965 and there do not appear to be any additional/new impacts to surrounding land owners, conditions are not recommended at the time of this report; however, if concerns are expressed by adjacent property owners, conditions may be considered.

Based on the continued growth and needs of the County for reliable electric service, staff feels expansion of the existing substation is necessary and complies with the goals outlined in the Montgomery County 2025 Comprehensive Plan. Therefore, planning staff recommends **approval** of the request to expand an existing electric substation.

Enclosures: Current Zoning Map
Aerial Photo Map
Site Photos
Application materials

# Appalachian Power Request for Special Use Permit

***Parcel ID 032009***

**Legend**

- Tax Parcels
- Subject Property (032009)
- AEP County Stations
- AEP County Transmission Lines

**County Zoning**

**Zoning Class**

- A1 - Agriculture
- Special Use Permits

0 25 50 100 150 200
Feet

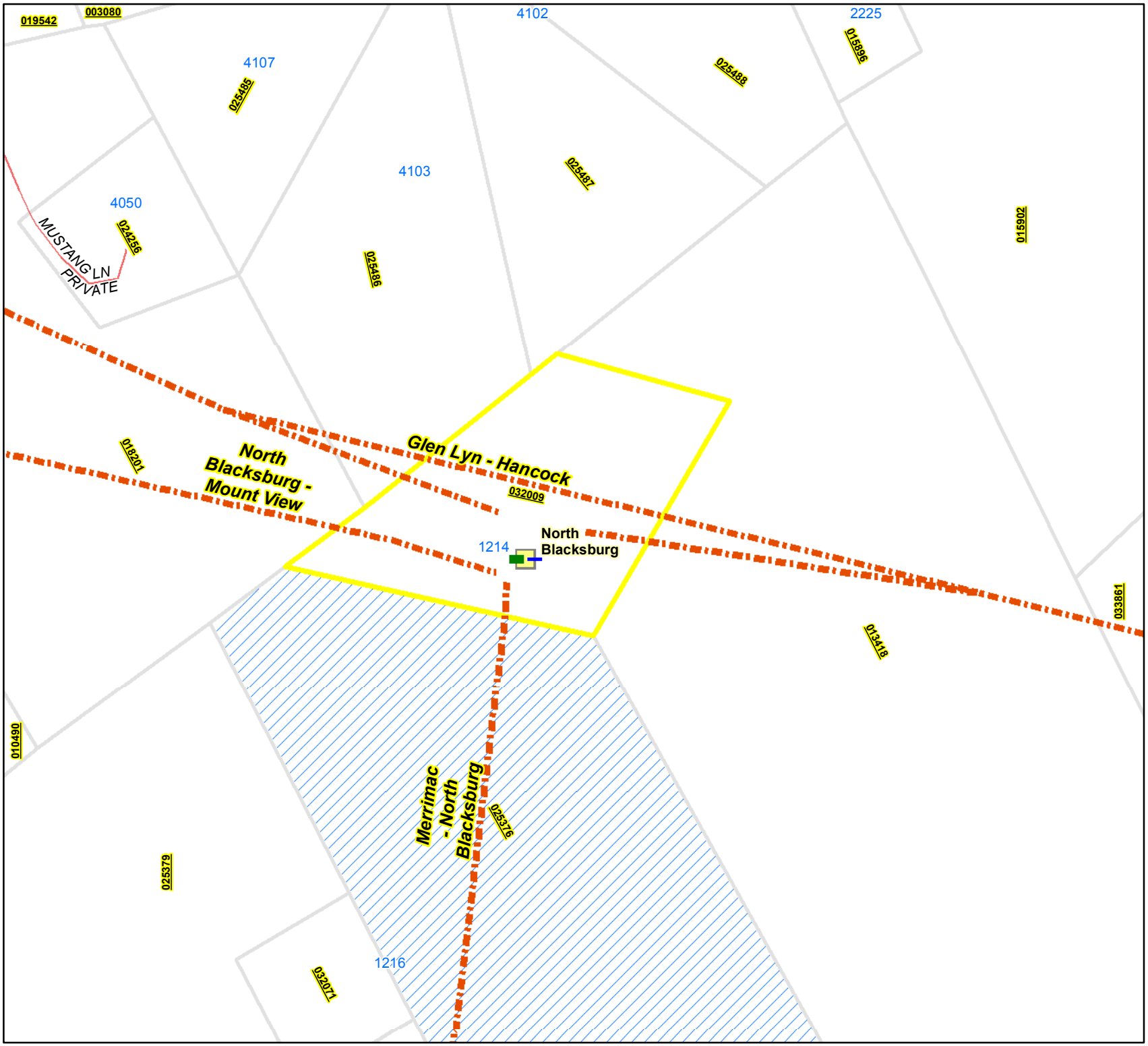


*Map Prepared by Montgomery County, Va Planning and GIS Services, 01/05/2016*

# *Appalachian Power Request for Special Use Permit*

***Parcel ID 032009***

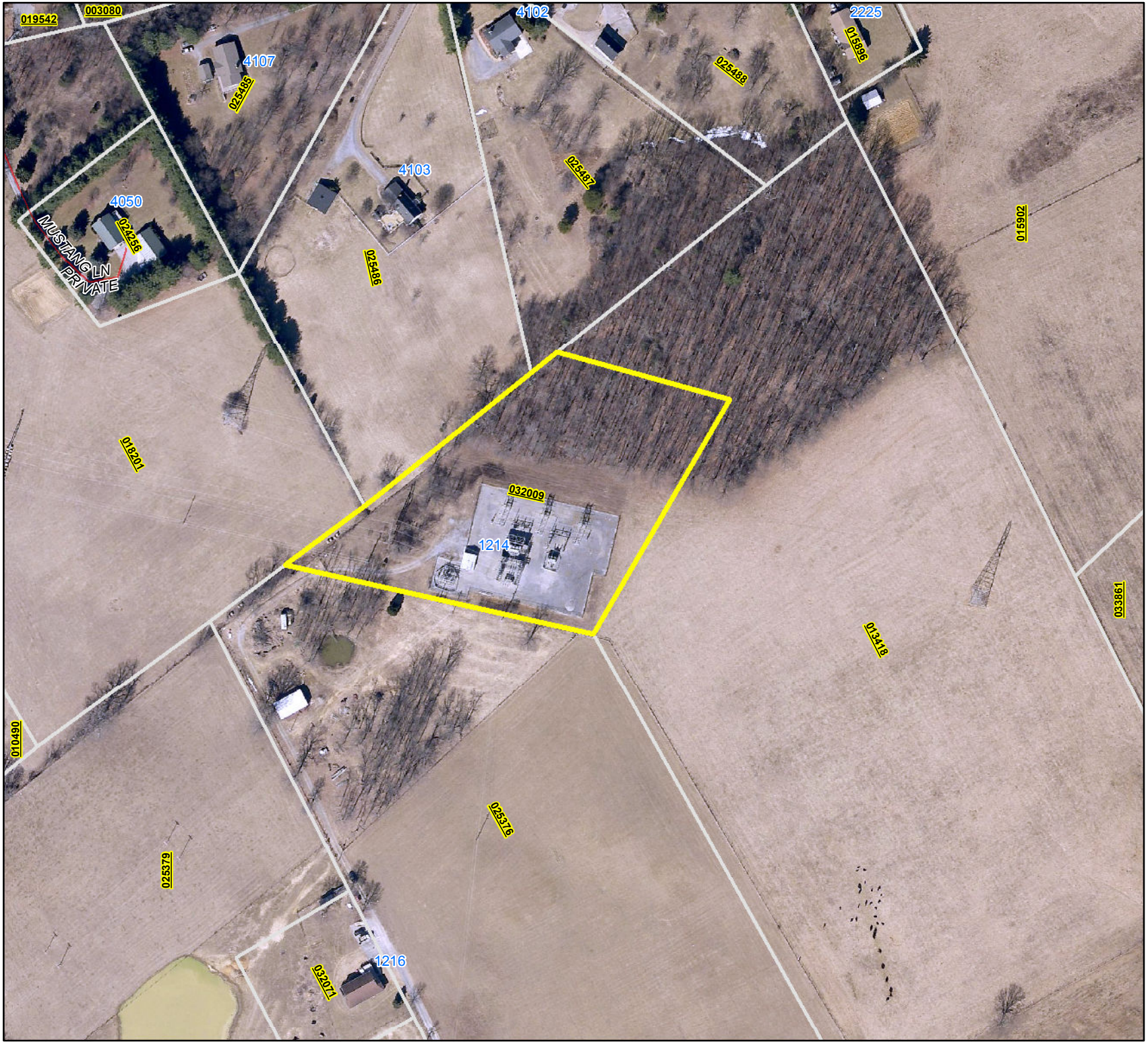


## Legend

- Tax Parcels
- Subject Property (032009)

0 25 50 100 150 200
Feet

*Map Prepared by Montgomery County, Va Planning and GIS Services, 01/05/2016*

Entrance to substation

Existing substation

Existing Substation

Existing Substation

Existing H frames and transmission lines

Adjoining parcel to the North

Transmission Line Easement

# Application to Planning Commission and Board of Supervisors

**Application For:** (check appropriate boxes)

☐ Rezoning ☐ Rezoning & Special Use Permit ☒ Special Use Permit

**Owner/Applicant Information:** (Use current mailing/contact information for all property owners. An additional sheet may be attached for multiple owners.) PROJECT MANAGER - AEP

Property Owner: APPALACHIAN POWER COMPANY
Address: P.O. BOX 2021
ROANOKE, VA 24022-2121
Phone 1: –
Phone 2: –
Email:

Agent: C.N. TOM LINKOUS II
Address: P.O. BOX 2021
ROANOKE, VA 24022-2121
Phone 1: 540-562-7097
Phone 2: 540-519-6689
Email: tnlinkous@aep.com

**Location of Property/ Site Address:** 1214 PANORAMA DR. BLACKSBURG VA. 24060

**Legal Record of Property:** Total Area: 3.559 Acres Magisterial District BLACKSBURG

Parcel ID: 032009 Tax Parcel Number(s): 029-A 6

**Rezoning Details:** Current Zoning District: A-1 Requested Zoning District: N/A

Desired Use(s): EXISTING ELECTRIC SUBSTATION, REZONING NOT REQUESTED.

**Special Use Permit:** Current Zoning District A-1 Total Area/Acres: 3.559 Ac.

Desired Use(s): ELECTRIC SUBSTATION 138kV. EXPAND STATION TO UPGRADE AND ADD EQUIPMENT FOR RELIABILITY.

**Comprehensive Plan Designation:** RESOURCE STEWARDSHIP

**Traffic Impact Analysis Required:** ☐ Yes (payment enclosed) ☒ No

*I certify that the information supplied on this application and on the attachments provided (maps or other information) is accurate and true to the best of my knowledge. In addition, I hereby grant permission to the agents and employees of Montgomery County and State of Virginia to enter the above property for the purposes of processing and reviewing the above application.*

C.N. Linkous 1/4/16
Agent's Signature Date
AEP PROJECT MANAGER FOR APPALACHIAN POWER CO.

Property Owner(s) Signature Date

**FOR OFFICE USE ONLY**

Date Received: 1/4/2016 Application Number: SU-2016-13623

Traffic Impact Analysis and Payment Received: ☐ Yes ☐ No Date Submitted to VDOT: _____

American Electric Power
P.O Box 2021
Roanoke, VA 24022
(540) 562-7097

AEP AMERICAN® ELECTRIC POWER

Date: January 5, 2016

Re: Appalachian Power Company's proposed North Blacksburg Substation Improvements (Parcel ID No. 032009; Tax Map ID No. 029-A 6)

Dari S. Jenkins, CZA
Planning & Zoning Administrator
Planning & GIS Services
Montgomery Co. Government Center
755 Roanoke St., Suite 2A
Christiansburg, VA 24073-3177
(540) 394-2148 Office

Ms. Jenkins:

Appalachian Power Company ("Appalachian"), an affiliate of American Electric Power Company, Inc., is proposing substation improvements at its North Blacksburg Substation (originally built in 1965) to maintain continued reliable electric service and to address the growing electric needs in Montgomery County. The substation is located at 1214 Panorama Drive, Blacksburg, VA, 24060.

Proposed improvements are minor and comparable in character to the existing facilities and equipment. The work generally includes expanding the existing substation yard approximately 50' to the east (see **Exhibit 1**) and installing the following:

- New breakers, buswork, two H-Frame transmission line structures (approximately 60' tall) and a control house (old control house will be removed) all located in the existing or expanded substation yard.
    - The two new transmission line H-Frames (see **Exhibit 2**) are needed to bring the existing transmission line into the substation at a taller height to allow the new electrical equipment (circuit breakers) to be installed underneath them. The existing structures are approx. 35' tall (see **Exhibit 3**) and will be removed.
- One monopole transmission structure (approximately 100' tall) on the existing substation property together with a minor relocation of the existing transmission line within the existing transmission line right-of-way directly adjacent to the substation property.

American Electric Power
P.O Box 2021
Roanoke, VA 24022
(540) 562-7097

The preliminary cost for the improvements is approximately $5 million. Estimated county annual property tax revenues attributable to the improvements are approximately $28,000. Construction is slated to start in first quarter of 2016 with an expected in-service date of second quarter of 2017.

The site and all adjacent properties are zoned A-1 Agricultural District. Appalachian is requesting the following:

- Special use permit if deemed required.
- Approval pursuant to Virginia Code § 15.2-2232, if required.

Please contact me if I can help in anyway.

Sincerely,

C.N. Tom Linkous II, Project Manager
American Electric Power
P.O. Box 2021
Roanoke, VA 24022
Ph: (540) 562-7097, Fax: (540) 562-7050

American Electric Power
P.O Box 2021
Roanoke, VA 24022
(540) 562-7097

AEP AMERICAN® ELECTRIC POWER

The following responses to Section 10-54(3)(g) of the Montgomery County Zoning Ordinance and the attached exhibit provide additional details concerning **Appalachian Power Company's proposed North Blacksburg Substation Improvements.**

1. **Whether the proposed Special Use Permit is consistent with the Comprehensive Plan (Addressed under "3. Comprehensive Plan Justification").**

   The existing substation, which was built in 1965, is located in the land use policy area Resource Stewardship (PLU 1.2). The Comprehensive Plan does not provide specific location recommendations relative to electric substations improvements but the need for additional utility facilities is addressed in the Utilities Section (UTL 2.0) of the current plan. The proposed improvements are consistent with the plan for the following reasons: (i) the improvements do not negatively impact people or natural environment; (ii) the project is necessary to maintain reliable electric service to the residences, farms, businesses and other customers in the surrounding area served by the substation; and (iii) the improvements are entirely contained within the existing substation property or within the existing transmission line right-of-way ("ROW") adjacent to the existing substation property. Furthermore, using the existing substation and the existing ROW is consistent with public preferences, SCC Staff guidelines, and the preference in Code of Virginia §§ 56-46.1 and 56-259 for paralleling or utilizing existing ROWs for transmission facilities when feasible.

2. **Whether the proposed Special Use Permit will adequately provide for safety from fire hazards and have effective measures of fire control.**

   The proposed substation facilities are required to meet the National Electric Safety Code (NESC) requirements.

3. **The level and impact of any noise emanating from the site, including that generated by the proposed use, in relation to the uses in the immediate area.**

   There will not be any additional noise from operation of the proposed substation equipment; consequently, the rural character will not be impacted by noise from the proposed project operation. Noise during construction will be temporary.

4. **The glare or light that may be generated by the proposed use in relation to uses in the immediate area.**

American Electric Power
P.O Box 2021
Roanoke, VA 24022
(540) 562-7097

AEP AMERICAN® ELECTRIC POWER

The existing and proposed dusk to dawn security lighting will be comparable and will not impact the adjacent properties.

5. **The proposed location, lighting and type of signs in relation to the proposed use, uses in the area, and the sign requirements of this Ordinance.**

   No additional signage will be installed for the existing substation.

6. **The compatibility of the proposed use with other existing or proposed uses in the neighborhood, and adjacent parcels.**

   The existing substation and all adjacent properties are zoned A-1 Agricultural District (see **Exhibit 1**). The nearest residence is approximately 400' north of the substation. The existing character and uses will not be affected by the proposed substation improvements. Furthermore, using the existing substation (built in 1965) and the existing ROW is consistent with public preferences, SCC Staff guidelines, and the preference in Code of Virginia §§ 56-46.1 and 56-259 for paralleling or utilizing existing ROWs for transmission facilities when feasible.

7. **The location and area footprint with dimensions (all drawn to scale), nature and height of existing or proposed buildings, structures, walls, and fences on the site and in the neighborhood.**

   The work generally includes expanding the existing substation yard approximately 50' to the east (see **Exhibit 1**) and installing the following:

   - New breakers, buswork, two H-Frame structures (approximately 60' tall) and a control house (old control house will be removed) all located in the existing or expanded substation yard.
     - The two new transmission line H-Frames (see Exhibit 2) are needed to bring the existing transmission line into the substation at a taller height to allow the new electrical equipment (circuit breakers) to be installed underneath them. The existing structures are approx. 35' tall (Exhibit 3) and will be removed.
   - One monopole transmission structure (approximately 100' tall) on the existing substation property together with a minor relocation of the existing transmission line within the existing right-of-way directly adjacent to the substation property.

American Electric Power
P.O Box 2021
Roanoke, VA 24022
(540) 562-7097

AEP AMERICAN® ELECTRIC POWER

8. **The nature and extent of existing or proposed landscaping, screening and buffering on the site and in the neighborhood.**

   The existing substation is surrounded by existing pasture/grazing land. The nearest residence is approximately 400' north of the substation.

9. **The timing and phasing of the proposed development and the duration of the proposed use.**

   Construction is slated to start in first quarter of 2016 with an expected in-service date of second quarter of 2017. The duration of use is indefinite.

10. **Whether the proposed Special Use Permit will result in the preservation or destruction, loss or damage of any topographic or physical, natural, scenic, archaeological or historic feature of significant importance.**

    No adverse impacts on natural, scenic, historic and cultural resources are anticipated. All required environmental permitting and studies will be completed.

11. **Whether the proposed Special Use Permit at the specified location will contribute to or promote the welfare or convenience of the public.**

    The proposed improvements to the 1965 facilities are necessary to maintain continued reliable electric service and to address the growing electric needs in Montgomery County.

    Public services and facilities, including water/sewer, roads, schools, parks/recreation, and fire/rescue, will all benefit generally from the improved reliability of electric service to this area resulting from the proposed improvements.

12. **The traffic expected to be generated by the proposed use, the adequacy of access roads and the vehicular and pedestrian circulation elements (on and off-site) of the proposed use, all in relation to the public's interest in pedestrian and vehicular safety and efficient traffic movement.**

    No additional traffic, excluding the temporary construction traffic, will be generated from the operation of the proposed improvements.

American Electric Power
P.O Box 2021
Roanoke, VA 24022
(540) 562-7097

AEP AMERICAN® ELECTRIC POWER

13. **Whether, in the case of existing structures proposed to be converted to uses requiring a Special Use Permit, the structures meet all code requirements of Montgomery County.**

    No existing structures will be converted to uses requiring a Special Use Permit. The proposed structures will meet all code requirements of Montgomery County.

14. **Whether the proposed Special Use Permit will be served adequately by essential public facilities and services.**

    Not applicable.

15. **The effect of the proposed Special Use Permit on groundwater supply.**

    The proposed project is not expected to affect the groundwater supply.

16. **The effect of the proposed Special Use Permit on the structural capacity of the soils.**

    Geotechnical studies and analysis will be completed before construction.

17. **Whether the proposed use will facilitate orderly and safe road development and transportation.**

    Not applicable.

18. **The effect of the proposed Special Use Permit on environmentally sensitive land or natural features, wildlife habitat and vegetation, water quality and air quality.**

    No adverse impacts on natural, scenic, historic and cultural resources or on water or air quality are anticipated. All required environmental permitting and studies will be completed.

19. **Whether the proposed Special Use Permit use will provide desirable employment and enlarge the tax base by encouraging economic development activities consistent with the Comprehensive Plan.**

American Electric Power
P.O Box 2021
Roanoke, VA 24022
(540) 562-7097

AEP AMERICAN® ELECTRIC POWER

The proposed improvements to the 1965 facilities are necessary to maintain continued reliable electric service and to address the growing electric needs in Montgomery County. The general public, industry and business will benefit generally from the improved reliability of electric service to this area resulting from the proposed improvements.

20. **Whether the proposed Special Use Permit considers the needs of agriculture, industry, and businesses in future growth.**

    See response to No. 19 above.

21. **The effect of the proposed Special Use Permit use in enhancing affordable shelter opportunities for residents of the County.**

    See response to No. 19 above.

22. **The location, character, and size of any outdoor storage.**

    No outdoor storage areas, excluding temporary construction storage areas, are required.

23. **The proposed use of open space.**

    The improvements are at an existing substation and will not affect any proposed or existing open space use.

24. **The location of any major floodplain and steep slopes.**

    The site does not include any floodplains or steep slopes.

25. **The location and use of any existing non-conforming uses and structures.**

    Not applicable.

26. **The location and type of any fuel and fuel storage.**

American Electric Power
P.O Box 2021
Roanoke, VA 24022
(540) 562-7097

Not applicable.

27. **The location and use of any anticipated accessory uses and structures.**

    Not applicable.

28. **The area of each use; if appropriate.**

    Not applicable.

29. **The proposed days/hours of operation.**

    The substation operates continuously.

30. **The location and screening of parking and loading spaces and/or areas.**

    Not applicable.

31. **The location and nature of any proposed security features and provisions.**

    Not applicable.

32. **The number of employees.**

    Not applicable.

33. **The location of any existing and/or proposed adequate on and off-site infrastructure.**

    Not applicable.

34. **Any anticipated odors, which may be generated by the uses on site.**

    No odors are anticipated with the operation of the substation. Temporary construction noise, dust or odors are possible.

American Electric Power
P.O Box 2021
Roanoke, VA 24022
(540) 562-7097

35. **Whether the proposed Special Use Permit uses have sufficient measures to mitigate the impact of construction traffic on existing neighborhoods and school areas.**

    Construction traffic will be minimized to the extent practical.

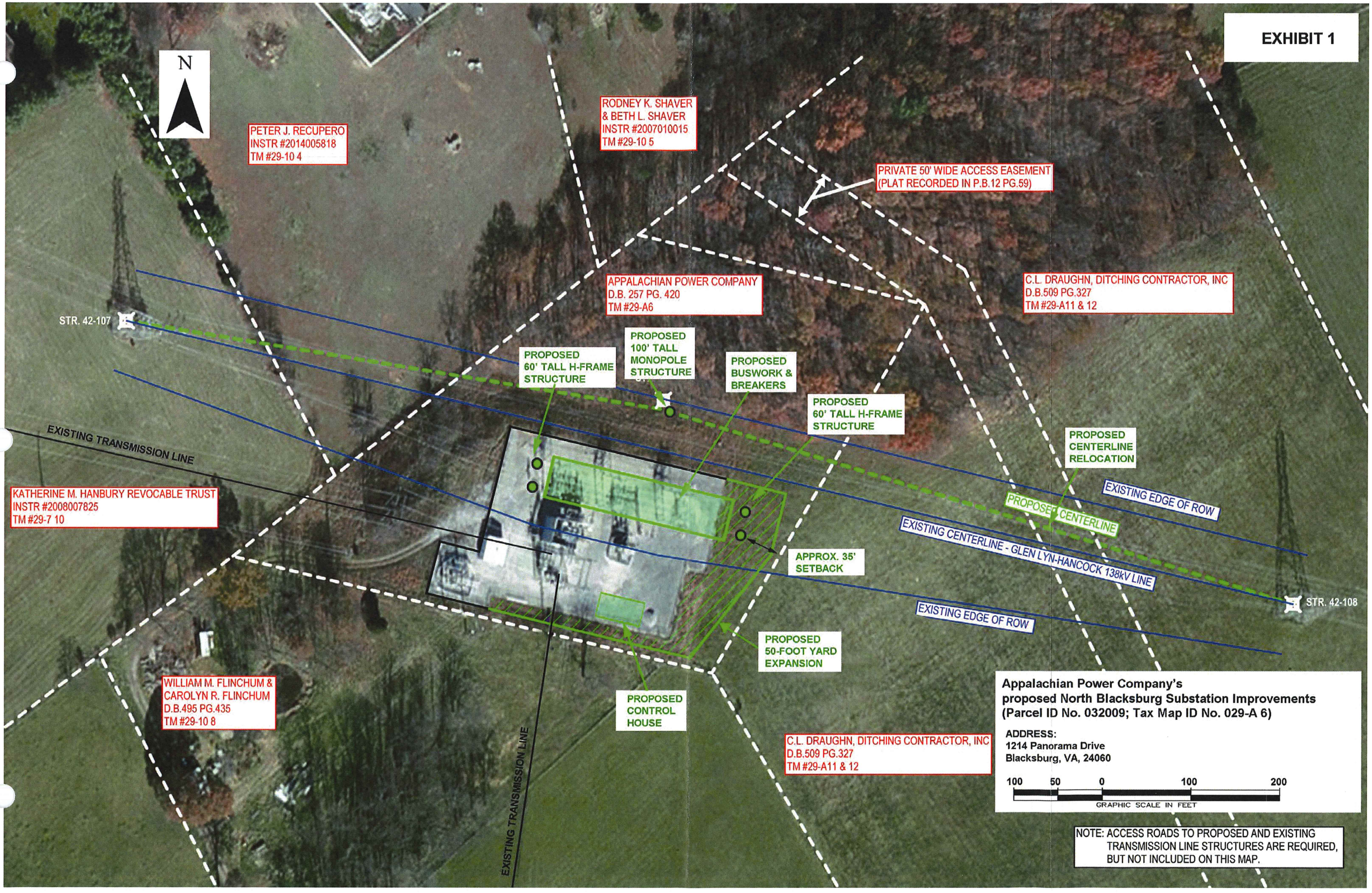
EXHIBIT 1
N
PETER J. RECUPERO
INSTR #2014005818
TM #29-10 4
RODNEY K. SHAVER
& BETH L. SHAVER
INSTR #2007010015
TM #29-10 5
PRIVATE 50' WIDE ACCESS EASEMENT
(PLAT RECORDED IN P.B.12 PG.59)
APPALACHIAN POWER COMPANY
D.B. 257 PG. 420
TM #29-A6
C.L. DRAUGHN, DITCHING CONTRACTOR, INC
D.B.509 PG.327
TM #29-A11 & 12
STR. 42-107
PROPOSED
60' TALL H-FRAME
STRUCTURE
PROPOSED
100' TALL
MONOPOLE
STRUCTURE
PROPOSED
BUSWORK &
BREAKERS
PROPOSED
60' TALL H-FRAME
STRUCTURE
PROPOSED
CENTERLINE
RELOCATION
EXISTING TRANSMISSION LINE
KATHERINE M. HANBURY REVOCABLE TRUST
INSTR #2008007825
TM #29-7 10
EXISTING EDGE OF ROW
PROPOSED CENTERLINE
EXISTING CENTERLINE - GLEN LYN-HANCOCK 138kV LINE
APPROX. 35'
SETBACK
STR. 42-108
EXISTING EDGE OF ROW
PROPOSED
50-FOOT YARD
EXPANSION
WILLIAM M. FLINCHUM &
CAROLYN R. FLINCHUM
D.B.495 PG.435
TM #29-10 8
PROPOSED
CONTROL
HOUSE
C.L. DRAUGHN, DITCHING CONTRACTOR, INC
D.B.509 PG.327
TM #29-A11 & 12
EXISTING TRANSMISSION LINE
Appalachian Power Company's
proposed North Blacksburg Substation Improvements
(Parcel ID No. 032009; Tax Map ID No. 029-A 6)
ADDRESS:
1214 Panorama Drive
Blacksburg, VA, 24060
100 50 0 100 200
GRAPHIC SCALE IN FEET
NOTE: ACCESS ROADS TO PROPOSED AND EXISTING
TRANSMISSION LINE STRUCTURES ARE REQUIRED,
BUT NOT INCLUDED ON THIS MAP.

# EXHIBIT 2

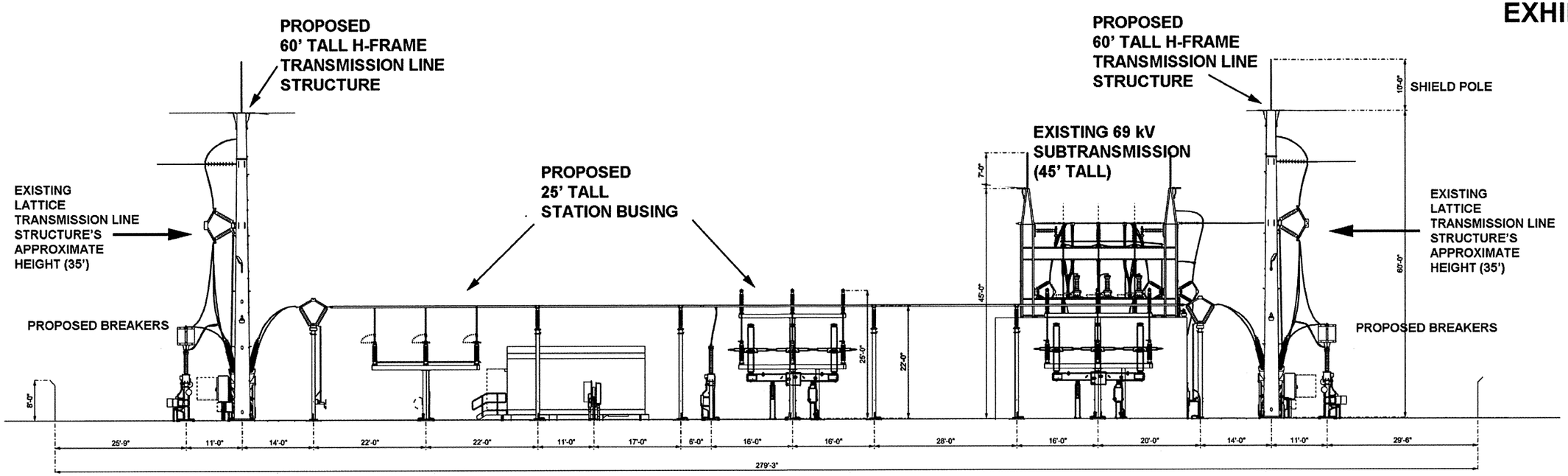


ELEVATION
LOOKING SOUTH

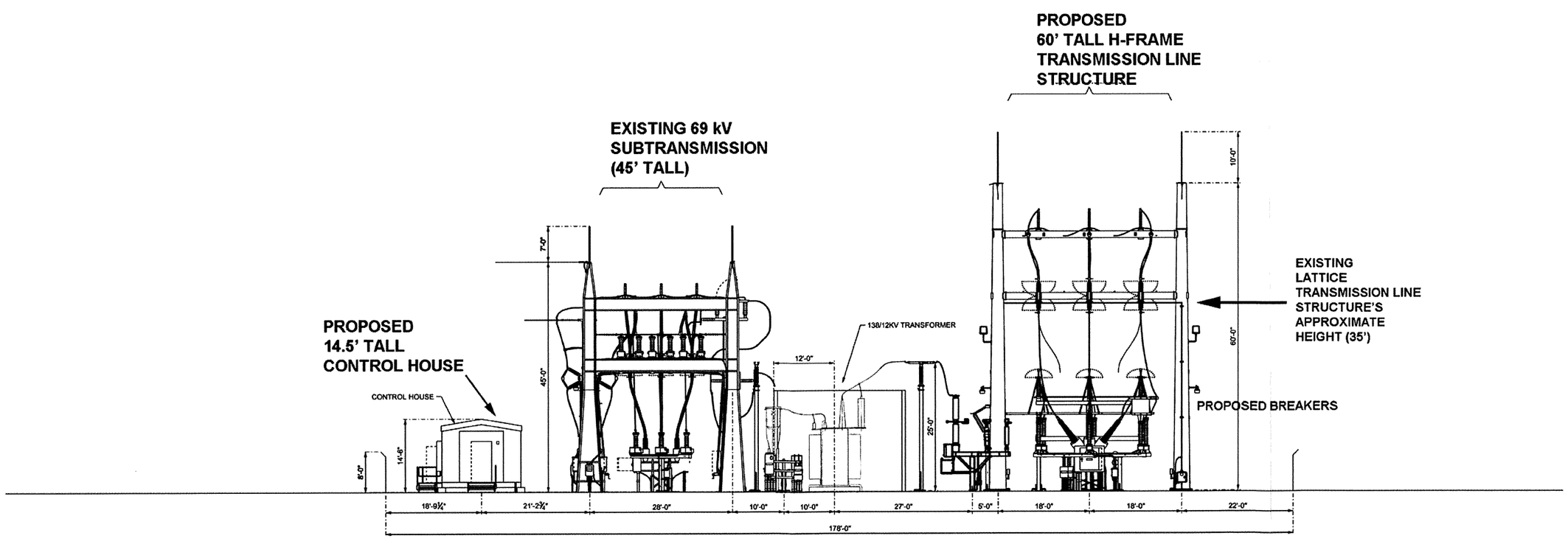


ELEVATION
LOOKING WEST

DWG NO. EDS-AP-2768-1022

# EXHIBIT 3

## CONDUCTOR SCHEDULE

| | |
|---|---|
| 301 | #4/0 AWG SOLID COPPER WIRE |
| 328 / 329 | 477 MCM STR ALUM |
| 327 | 4/0 AWG STR ALUM |
| 323 | 795 MCM STR ALUM |
| 330 / 350 | 1590 MCM STR ALUM |

## DESIGN PRACTICES

NORTH ARROW TO BE PLACED ON KEY PLANS TO SUIT LOCATION PLAN
PHASING AND BUS CONNECTIONS TO BE COMPLETED IN KEY PLANS
SHOW CAPACITORS IN KEY PLANS

## MAXIMUM DESIGN TENSIONS

WITHOUT GUYS - SINGLE FRAME
3000# H L TENSION AT 0°
8000# H L TENSION AT 15°
WITHOUT GUYS TWO FRAMES WITH AERIAL GUY WIRES
5000# H L TENSION AT 0°
WITH GUYS SINGLE, TWO OR THREE FRAMES WITH AERIAL GUY WIRES
8000# H L TENSION AT 0°

## NOTES

REFER TO ITEM NO 553 FOR BUS SUPPORT INSULATORS

NO 3 IN CIRCLES REFER TO B/M# 23031

## REFERENCE DRAWINGS

TRANSF SW FRAME ELEC ASSEMBLY DWG # EDS AP 2768 1023
STEEL DETAILS FOR FRAMES A, B & C
DWG # EDS-AP-2768-1921 1 - 1922
SWITCH M T G DETAILS DWG # EDS AP 2768 458
BUS STRAIN ASSEMBLY (FOR ALUM CABLE) DWG # EDS AP 2768 976
BUS STRAIN ASSEMBLY (FOR COPPER CABLE) DWG # EDS-AP-2768 975
FRAME FOUNDATION DETAIL DWG # EDS - AP 2768 325 324
GUY WIRE FOUNDATION FOR 8000# TENSION ONLY DWG # EDS - AP 2768 323
GUY WIRES & HARDWARE DWG # EDS AP 2768 1012 658
FOUNDATION PLAN DWG # EAP 2768-1150
LOCATION PLAN DWG # EAP 2768-1901

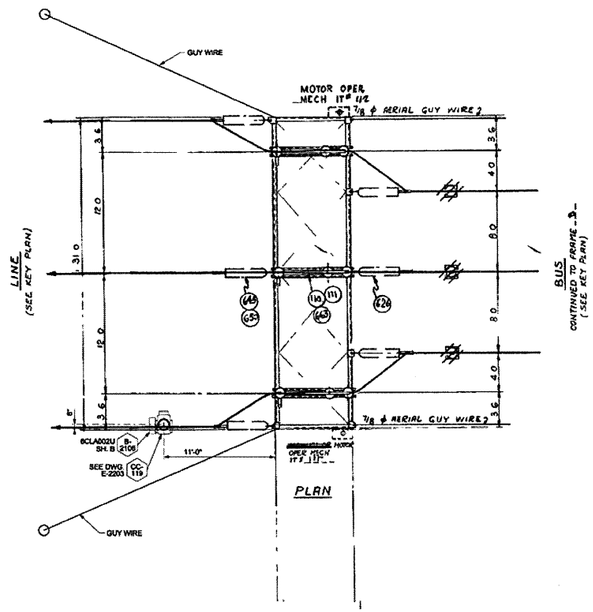


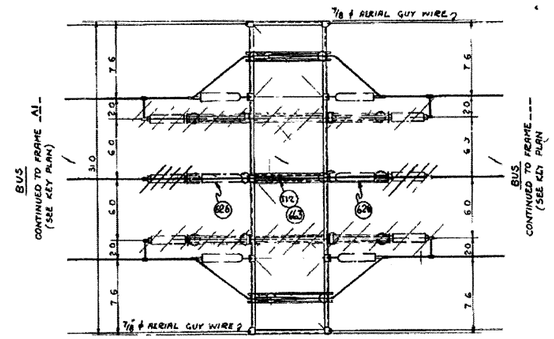


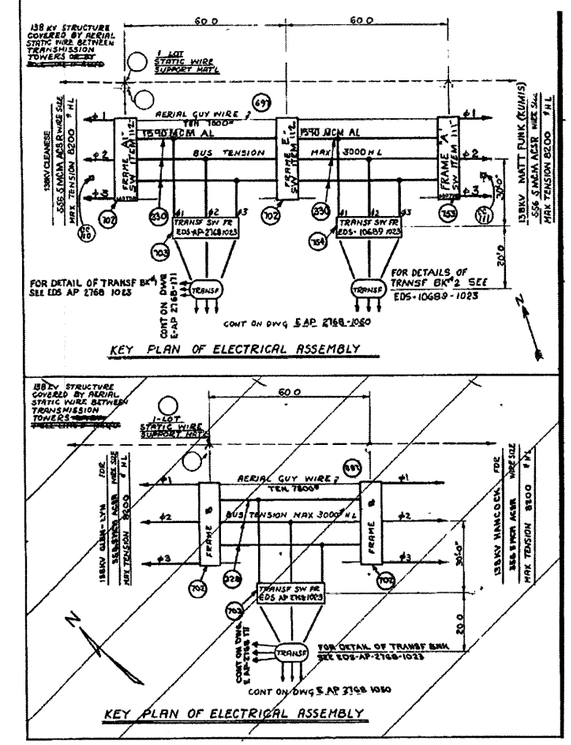


NOTE.
FRAME 'A1' AS SHOWN
FRAME 'A' OPPOSITE HAND

FIELD NOTE:
1. FIELD DRILL 1 1/16" Ø HOLES USING MK-7300 AS TEMPLATE. TYPICAL 3 PLACES.

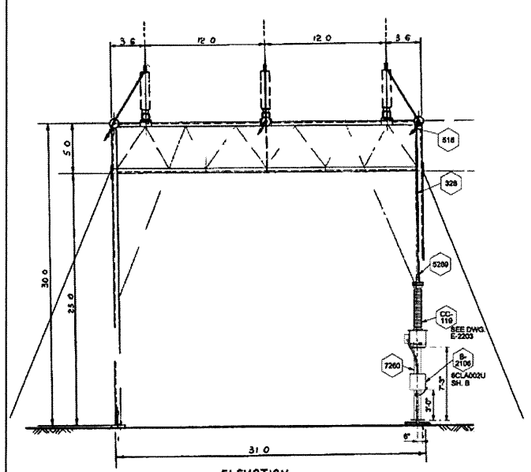


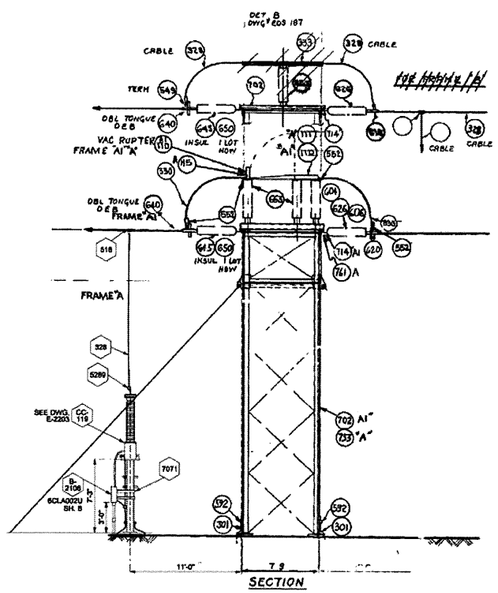


FRAME "A1" 1 REQ'D AS SHOWN @ 0 AP2768 ORIGINALLY FRAME "B"
FRAME "A" 1 REQ'D OPP HAND C1# A10689

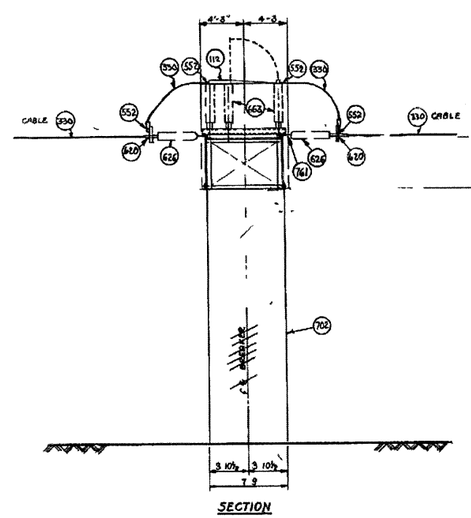


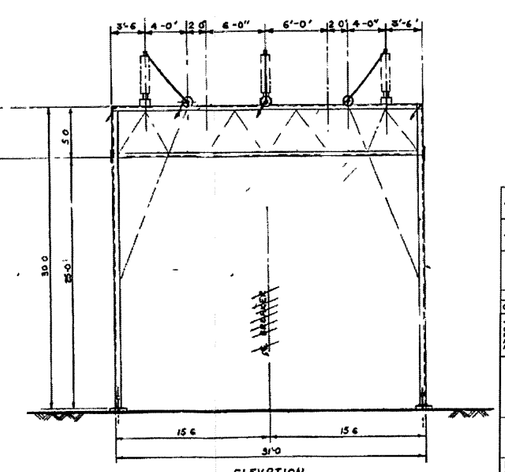


FRAME "E" 1 REQ'D AS SHOWN
ORIGINALLY FRAME "B"

NUMBERS IN ⬡ REFER TO B/M #41594666

| ISSUE# | NO | DATE | REVISION DESCRIPTION |
|---|---|---|---|
| 41594666A1 | 7 | 10/20/11 | REVISED PER FIELD MARKED PRINT & LETTER DATED 09/07/11. BY COMMONWEALTH ASSOCIATES, INC. APP: CMA DR: WAP ENG: CMA CH: DAB |
| 41594666C1 | 6 | 3/18/11 | REPLACED PHASE 3 CCVT ON CELANESE LINE. ADDED 138KV MOBILE DISC. SW. BY COMMONWEALTH ASSOCIATES INC. APP: CMA DR: WAP ENG: CMA CH: DAB |
| | 5 | 09/05/91 | ADDED 2OBLVN VAC-RUPTER TO 138KV LINE. ADDED DEAD-END CLAMP ON 138KV STRAIN BUSES REV AS PER FIELD LETTER DATED 12/4/89 APP: DR: ENG: CHK: |

OLD DWG #: STD DWG #:

"THIS DRAWING IS THE PROPERTY OF AMERICAN ELECTRIC POWER AND IS LOANED UPON CONDITION THAT IT IS NOT TO BE REPRODUCED OR COPIED, IN WHOLE OR IN PART, OR USED FOR FURNISHING INFORMATION TO ANY PERSON WITHOUT THE WRITTEN CONSENT OF AMERICAN ELECTRIC POWER, OR FOR ANY PURPOSE DETRIMENTAL TO THEIR INTEREST, AND IS TO BE RETURNED UPON REQUEST"

APPALACHIAN POWER COMPANY

NORTH BLACKSBURG STATION

BLACKSBURG VIRGINIA

138KV

ELECTRICAL ASSEMBLY

UTILIZING SWITCH OR BREAKER STEEL FRAME

DWG. NO. EDS-AP-2768-1022

WO#: STATION PROJECTS ENGINEERING

SCALE: 3/16" = 1'-0"
DR: RGP
CH: BFH
ENG:
DATE: 7-23-68

APPROVED BY: ENGINEERING DIV. 4/11/68 DESIGN DIV. 4/11/68

AEP AMERICAN ELECTRIC POWER — 1 RIVERSIDE PLAZA COLUMBUS, OH 43215 — REV 7

CADFILEPATH

STATION PROJECTS ENGINEERING

PLOTTED: DD-MMM-YYYY AT HH:MM

AEP G (30 X 40)

Letter of Support

February 8, 2016

AEP Transmission:

I, C.L. Draughn, Ditching Contractor, INC, currently own 45.31 acres Tax Parcel 29-A-11 & 12 situated in Mount Tabor Magisterial District, Montgomery County, Virginia. I have agreed to a Temporary Construction Easement containing approximately 0.25 acres located east of Appalachian Power Company's North Blacksburg Station Site. The substation is adjacent to my existing parcel and the proposed improvements to this station will not affect my current land use. Therefore, I am in support of the reliability improvement project.

C L Draughn

C.L. Draughn, Ditching Contractor, INC